30963-3225

-See page 2 for detailed wiring.

1. See page 3 for relevant controller system configuration settings.
2. Set VR92 remote address to its zone number - 1.
   eg. If VR92 is in zone 3, then remote address must be set to 2.
4. Link required (not factory fitted).
7. Optional for Heat Meters.
8. Coil flow rate MUST be considered. See the DHW in cascade setting options on the HP controller
17. Rotary Isolator must be situated outside of the Protective Zone

Vaillant

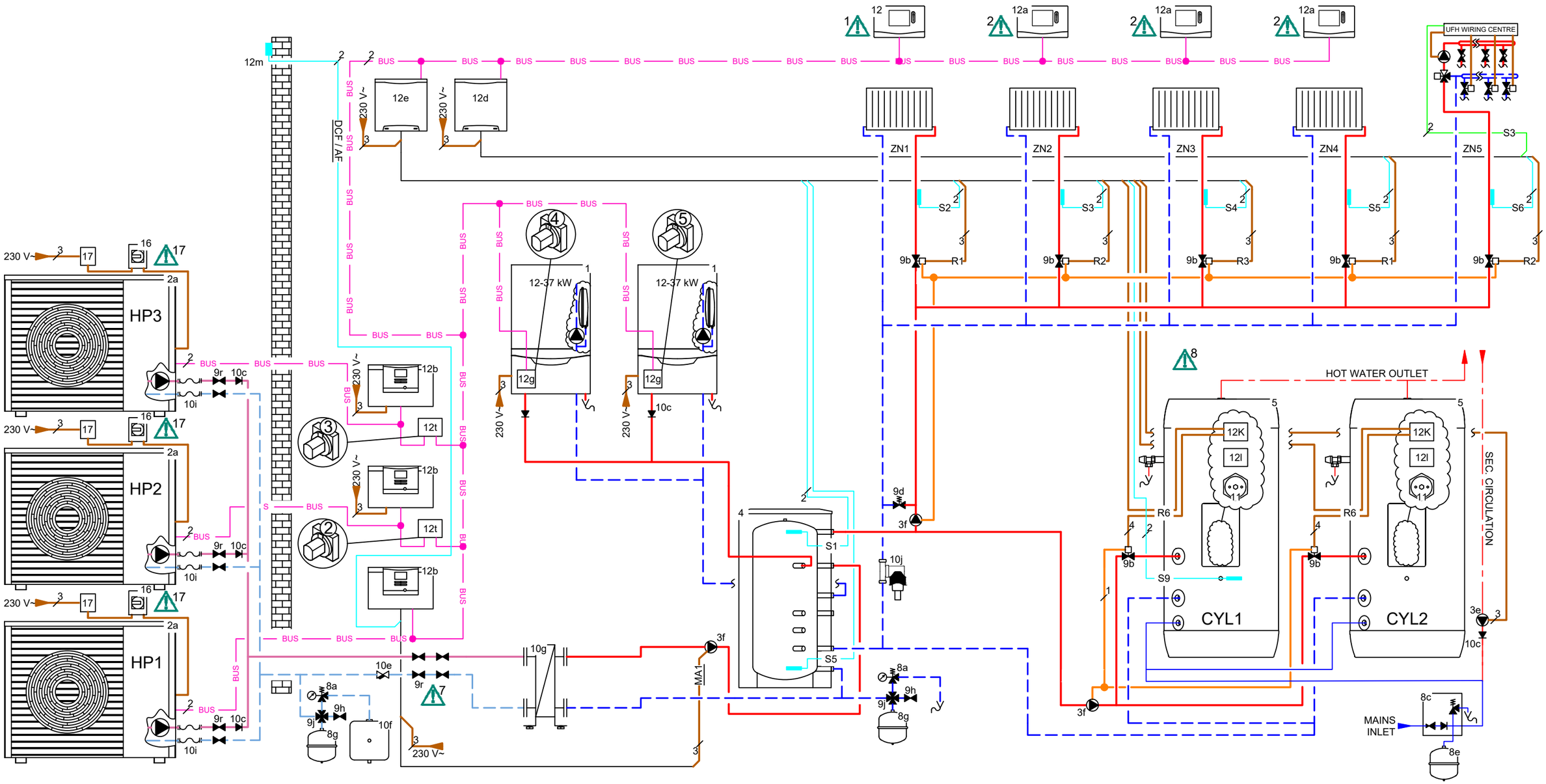

Vaillant Group disclaimer: This drawing is supplied for information and general guidance only. No responsibility is accepted for any errors or omissions contained within or for any cost incurred in rectifying any work relating to it.	Drawn: A.FLINN 30/06/2023 REV: ----	Appliance(s): 3x aroTHERM Mono, 2x ecoTEC Boiler , 1x Plate Heat Ex, 1x Buffer (300-2000L) Control(s): 1x sensoCOMFORT, 3x VR92	HTG. Circuit(s): 4x Radiator - Direct, 1x UFH - 3rd Party, ---- Domestic Hot Water: 2x Cylinder (Parallel)

30963-3225

-See page 2 for detailed wiring.

1. See page 3 for relevant controller system configuration settings.
2. Set VR92 remote address to its zone number - 1.
   eg. If VR92 is in zone 3, then remote address must be set to 2.
4. Link required (not factory fitted).
7. Optional for Heat Meters.
8. Coil flow rate MUST be considered. See the DHW in cascade setting options on the HP controller
17. Rotary Isolator must be situated outside of the Protective Zone

Vaillant

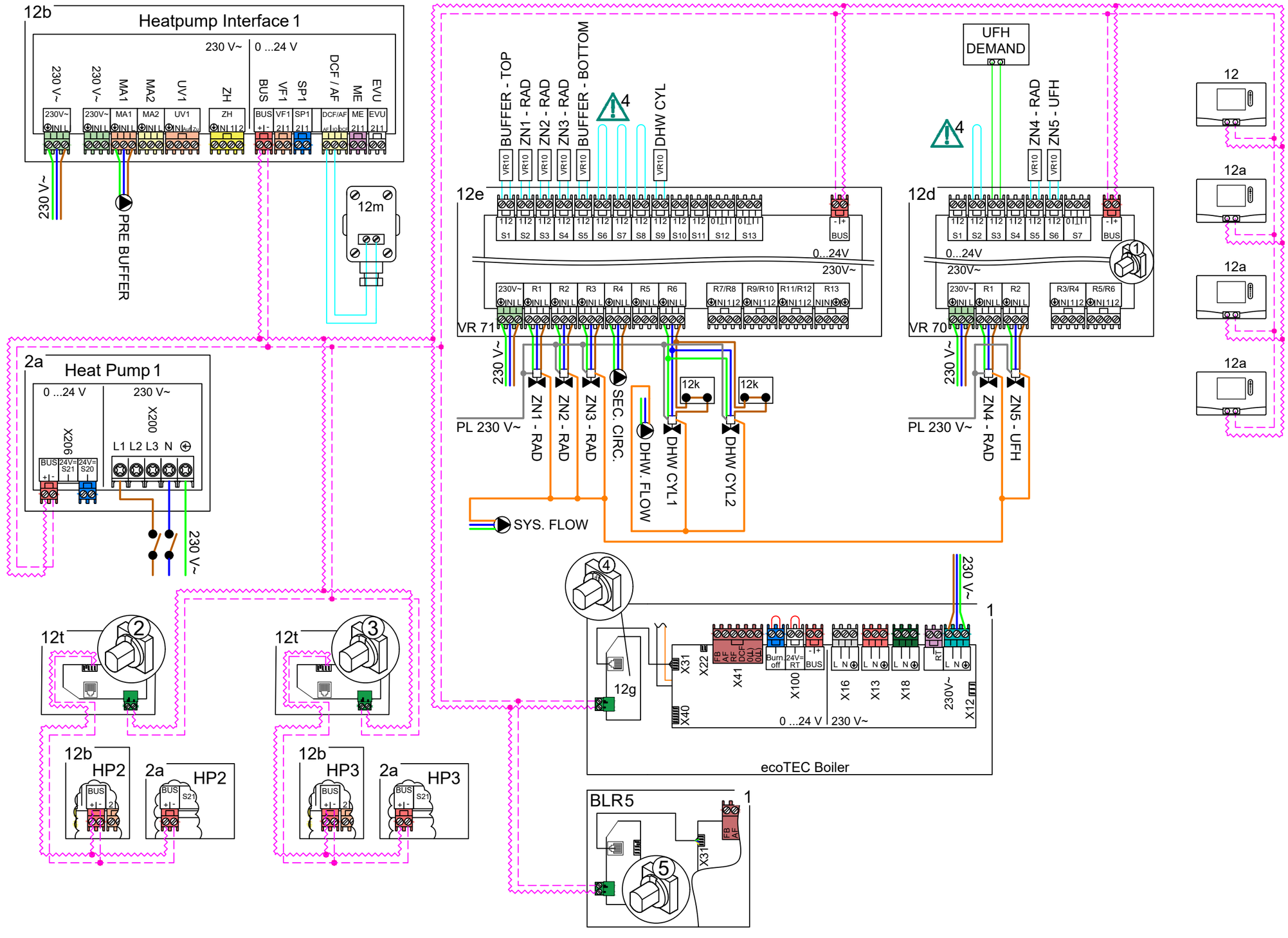

Vaillant Group disclaimer: This drawing is supplied for information and general guidance only. No responsibility is accepted for any errors or omissions contained within or for any cost incurred in rectifying any work relating to it.

Drawn: A.FLINN

30/06/2023 REV: ----

Appliance(s): 3x aroTHERM Mono, 2x ecoTEC Boiler , 1x Plate Heat Ex, 1x Buffer (300-2000L)

Control(s): 1x sensoCOMFORT, 3x VR92

HTG. Circuit(s): 4x Radiator - Direct, 1x UFH - 3rd Party, ----

Domestic Hot Water: 2x Cylinder (Parallel)

30963-3225

Terms and Conditions for Vaillant Schematic Diagrams

PLEASE NOTE THAT THE DIAGRAM PROVIDED IS FOR GENERAL INFORMATION PURPOSES ONLY. THE ADVICE AND INPUT OF A PROFESSIONAL, QUALIFIED, GAS SAFE / MCS INSTALLER MUST BE SOUGHT. VAILLANT IS NOT RESPONSIBLE FOR INSTALLATIONS OR FOR THE PROFESSIONAL DESIGN OF THE SYSTEM.

1. All applicable laws and regulations must be followed.
2. The Diagram may be subject to alteration at any time.
3. Vaillant is not responsible for any inaccuracies or omissions in the information and drawings provided to it and upon which it relies when constructing the diagrams.
4. Any reproduction of the design must have the prior permission of Vaillant.
5. During the planning, design, installation and later use of the system, all operating instructions must be followed.
6. In no circumstances shall Vaillant be liable to you or any other third parties for any loss or damage (including, without limitation, damage for loss of business or loss of profits) arising directly or indirectly from your use of or inability to use, this diagram.
7. Vaillant makes no representations or warranties of any kind, express or implied about the completeness, accuracy, reliability or suitability of the diagram for any purpose. Any reliance you place on the diagram is therefore strictly at your own risk.
8. These disclaimers and exclusions shall be governed by and construed in accordance with English law.

sensoCOMFORT System Configuration

Not all settings are displayed, commissioning of the controller should be done diligently; going through each adjustable option with consideration to the property and system requirements.

Setting	Value
Installation	
Adapt. heat curve:	Deactivated
Hybrid manager:	Bivalence pt
Heating bivalence point:	-20°
DHW bivalence point:	-20°
Alternative point:	Off
ESCO:	HP + BUH Off
Back-up boiler:	DHW + heat.
Conf. ext. input:	Open, deactiv.
Actuation reversal:	On
Basic system diagram config.	
Basic system diagram code:	16
FM5 configuration:	3
FM5 MO:	Circulation pump
HP control module configuration	
MO 2:	Not connected
Circuit 1	
Circuit type:	Heating
OT switch-off threshold:	30°
Heat curve:	**Site specific
Min. target flow temperature:	15°
Max. target flow temperature:	45° (Assumed)
Set-back mode:	Normal
Room temp. mod.:	Expanded

Setting	Value
Circuit 2	
Circuit type:	Heating
OT switch-off threshold:	30°
Heat curve:	**Site specific
Min. target flow temperature:	15°
Max. target flow temperature:	45° (Assumed)
Set-back mode:	Normal
Room temp. mod.:	Expanded
Circuit 3	
Circuit type:	Heating
OT switch-off threshold:	30°
Heat curve:	**Site specific
Min. target flow temperature:	15°
Max. target flow temperature:	45° (Assumed)
Set-back mode:	Normal
Room temp. mod.:	Expanded
Circuit 4	
Circuit type:	Heating
OT switch-off threshold:	30°
Heat curve:	**Site specific
Min. target flow temperature:	15°
Max. target flow temperature:	45° (Assumed)
Set-back mode:	Normal
Room temp. mod.:	Expanded

Setting	Value
Circuit 5	
Circuit type:	Heating
OT switch-off threshold:	30°
Heat curve:	**Site specific
Min. target flow temperature:	15°
Max. target flow temperature:	45° (Assumed)
Set-back mode:	Eco
Room temp. mod.:	Inactive
Zone 1	
Zone activated:	Yes
Zone assignment:	Control
Zone 2	
Zone activated:	Yes
Zone assignment:	Rem. contr. 1
Zone 3	
Zone activated:	Yes
Zone assignment:	Rem. contr. 2
Zone 4	
Zone activated:	Yes
Zone assignment:	Rem. contr. 3
Zone 5	
Zone activated:	Yes
Zone assignment:	No assignmt
Domestic hot water	
Cylinder:	Active
Anti-legio. day:	**User preference
Anti-legio. time:	**User preference
Cylinder charging offset:	15 K
Cyl. charg. anti-cycl. time:	5 min

01	Boiler
02	aroTHERM Monoblock
03e	Secondary Circulation Pump
03f	General Pump
04	Buffer - allSTOR (300-2000L)
05	uniSTOR DHW Cylinder
08a	Pressure Relief Valve
08c	DHW Inlet Safety Group
08e	Heating / DHW Expansion Vessel
08g	Brine Expansion Vessel
09b	Zone Valve
09d	Bypass Valve
09h	Fill / Drain Valve
09j	Expansion Vessel Service Valve
09r	Isolation Valve
10c	Non-return Valve
10e	Y Strainer
10f	Brine Collection Tank (If applicable)
10g	Plate Heat Exchanger
10i	Flexible Connection
10j	Magnetic Filter
11	Immersion Heater
12	sensoCOMFORT
12a	VR92
12b	Heat Pump Interface
12d	Wiring Centre - VR 70
12e	Wiring Centre - VR 71
12g	eBUS Coupler - VR32/3
12K	High Limit Cut Out
12l	Cylinder Thermostat
12m	Outdoor Temperature Sensor
12t	eBUS Coupler - VR32/B
16	Rotary Isolator
17	Electric Meter

Domestic Cold Water
Domestic Hot Water
Heating Flow
Heating Return
Cooling Flow
Cooling Return
Glycol Flow
Glycol Return
Secondary Circulation

230/400V Wire
Low Voltage Sensor Wire
Low Voltage eBUS
Low Voltage Demand Signal
eBUS +
eBUS -

Indicates Cable Junction

Indicates No. of cable cores

Vaillant Group disclaimer: This drawing is supplied for information and general guidance only. No responsibility is accepted for any errors or omissions contained within or for any cost incurred in rectifying any work relating to it.

Drawn: A.FLINN

30/06/2023 REV: ----

Appliance(s): 3x aroTHERM Mono, 2x ecoTEC Boiler , 1x Plate Heat Ex, 1x Buffer (300-2000L)

Control(s): 1x sensoCOMFORT, 3x VR92

HTG. Circuit(s): 4x Radiator - Direct, 1x UFH - 3rd Party, ----

Domestic Hot Water: 2x Cylinder (Parallel)