Peak Tree Consultancy

Arboricultural Method Statement

Site: Land adjacent to

4 Haywards Close

Glossop

SK13 7AZ

Site Ref:PTC/2309

Prepared for: Steve Walsh

Date:11/5/2023

Ref No: PTC/2309/003.02

Peak Tree Consultancy Ltd is a registered company England and Wales company No 13926128

Contact Details

Peak Tree Consultancy
106 Mottram Road, Broadbottom, Cheshire SK146BB
Tel: 07979 427 221
Email: Info@PeakTreeConsultancy.com

Report Dates

	Date	Ref	Author	Status
Inspection	19/4/2023	PTC/2309/003.1	Monica Gillespie	Completed
Report	25/4/2023	PTC/2309/003.1	Monica Gillespie	Completed
Revised	11/5/2023	PTC/2309/003.2	Monica Gillespie	Completed

Copyright

This report, all plans, illustrations, and other associated material remains the property of Peak Tree Consultancy Ltd until paid for in full. Copyright and intellectual property rights remain with Peak Tree Consultancy Ltd. The contents of this document must therefore not be copied or reproduced in whole or in part for any purpose without the written consent of Peak Tree Consultancy Ltd

Contents

Summary

1.0 Introduction
2.0 The Site
3.0 Planning Approval
4.0 Tree Protection Plan

Appendices

Appendix 1: Survey Methodology
Appendix 2: Statutory Controls and Planning Policy / legislation
Appendix 3 Standard tree protection fencing specification
Appendix 4: Report Limitations

Plans and Survey data.

Tree Survey Schedule (TSS Ref: PTC/2308/003.1/TSS)
Tree Protection Proposals (TPP) Ref: PTC/2308/003.02/TPP

Summary

1.0 This report includes a baseline tree survey, and an Arboricultural Method Statement Assessment (AMS) in accordance with BS5837:2012. This may require amendment if there are significant changes to the proposals.

2.0 There is no significant vegetation on site but the Root Protection Area of 3 neighbouring trees (T1-T3) encroach on the site. There are no protected trees effected by the approved scheme.

3.0 Planning consent (HPK/2023/0035) was granted on 21st April 2023 for the development of a new single dwelling on this site and a condition was applied requiring a scheme for tree protection measures.

4.0 The defined circular Root Protection Area has been amended in accordance with BS5837:2012 to reflect site conditions and Tree Protection Fencing will be erected and retained in situ during development of the site to create a Construction Exclusion zone.

1. Introduction

1.1 Instruction: This Arboricultural Method Statement (AMS) was commissioned by Mr Steve Walsh of 4 Haywards Close, Glossop in relation to the construction of a new single dwelling on land adjacent to 4 Haywards Close Glossop SK13 7AZ (referred to as 'The Site'). We have been instructed to provide:

- A tree schedule of the relevant trees including basic data and a condition assessment to comply with the general requirements of BS5837:2012 – Trees in Relation to Design, Demolition and Construction - Recommendations (BS5837:2012)

- Produce an Arboricultural Method Statement (AMS) which provides a scheme of tree protection measures.

1.2 Key documents provided by the client:

Document	Reference	Author	Date
Proposed floor Plans and Elevations	22 341-001-C	Redfern Architectural Services	Sept 22
Site sections	22 341-004-A	Redfern Architectural Services	Sept 22

1.3 To make this report easier to use, the emphasis is on keeping the main text concise with minimal background explanations. Where appropriate, further explanations and information are included as appendices. Key points and findings are highlighted.

1.4 The assessment of the existing trees on the site or adjacent to the site and their proposed protection has been guided by BS5837:2012 – Trees in Relation to Design, Demolition and Construction - Recommendations and industry best practice.

Section 1: Summary

This report includes a baseline tree survey, and an Arboricultural Method Statement Assessment (AMS) in accordance with BS5837:2012. This may require amendment if there are significant changes to the proposals.

2.0 The Site

2.1 Site description The site is located to the north of Glossop town centre. The location is shown in Figure 1 below.



Figure 1. Site location of 4 Haywards Close, Glossop 'The site'

2.2 The Survey: The site was surveyed by Monica Gillespie on 19/4/2023. The data was collected in line with section 4.4 of BS 5837. All observations were from ground level without detailed investigations, and all dimensions should be treated as estimates unless otherwise indicated. Information was collected about trees outside the boundaries and where access was not possible observations of them has been confined to what was visible from within the property. The weather at the time of inspection was cool and dry and with good visibility. A detailed survey methodology is attached at Appendix 1.

2.3 The trees. There is no significant vegetation on site. There are some areas of shrubbery that will be retained where possible and these will be supplement with new planting as part of the landscaping scheme.

There are 4 poplar trees (T1-T4) in the neighbouring property located close to the rear boundary. The Root Protection Areas (RPA) of three of these trees T1-T3) encroach into the site. There are also a number of third-party boundary hedges adjacent to the site.

2.4 Plans: The Tree Survey Schedule (TSS) is attached to this report. The trees indicated on the Tree Protection plan (TPP) at the end of this report.

2.5 Protected trees: A preliminary check for protected trees was undertaken using High Peak Borough Council's and Derbyshire County Council's Interactive planning map. The property is not within a Conservation Area and there are no Tree Preservation Orders on trees in or immediately adjacent to the site.

2.6 Habitat and protected species: The Wildlife and Countryside Act 1981, (as amended), provides statutory protection to birds, bats and other species that inhabit trees. These could impose constraints on the use and timing of access to the site in addition to any of the tree matters considered in this report. It is likely that nesting birds will be present on the site during the period March to September. These issues are beyond the scope of this report, and you must seek advice from an ecologist to check if any such constraints apply to this site.

2.6 Additional information Further detail about statutory controls planning policy and legislation is set out in Appendix 2

Section 2: Summary

There is no significant vegetation on site but the Root Protection Area of 3 neighbouring trees (T1-T3) encroach on the site. There are no protected trees effected by the approved scheme.

.

3.0 Planning Approval

3.1 Planning consent (HPK/2023/0035) was granted on 21st April 2023 for the development of a new single dwelling on this site. and the following condition was applied in relation to trees.

HPK/2023/0035- Condition 7

7. No development shall take place until a scheme for tree protection measures (both above and below ground) to be implemented during the construction period has been submitted to and approved in writing by the Local Planning Authority. The scheme shall include:

(i) Details of a construction exclusion zone (including protective fencing of a height and design which accords with the requirements BS 5837: 2012) to be formed around the root protection areas of those trees to be retained;

(ii) Details of any excavation to take place within the root protection areas of those trees to be retained;

(iii) Details of the foundations of any building, hard standings and/or boundary treatments to be constructed within the root protection areas of those trees to be retained.

The development shall thereafter be carried out in strict accordance with the protection measures contained within the duly approved scheme throughout the entirety of the construction period.

4.0 Tree protection plan

4.1 Purpose: This Tree Protection plan (TPP) sets out how existing trees will be protected during the site preparation and construction phases of development. It must be implemented to secure successful tree retention. It is based on the general standards for development set out in British Standards Institution BS5837:2012 and industry best practice.

4.2 Limitations: Logistical issues such as site storage and the build programme are not finalised therefore some of its content will need to be updated as more detailed information becomes available.

4.3 Construction Exclusion zone

4.3.1 Root Protection Areas (RPA's): the RPA is the minimum area required to ensure there is sufficient roots and rooting volume to maintain the trees vitality. This was calculated in accordance with table D.1 and Section 4.6 of BS 5837 and as described at Appendix 1 at A.3.14. The figures are given the tree survey schedule (Ref: PTC/2309/003.1/TSS) and the circular RPA is illustrated as a dashed circle on the Tree Protection Plan (Ref: PTC/2809/003.2/TPP).

4.3.2 Amendments to the Root Protection Areas (RPA's): The proposed retaining structure will slightly encroach into the circular Root Protection Area (RPA) of 3 of the trees (T1-T3). 4.6.2 of BS5837:2012 allows for some modifications of the RPA based on the sound arboricultural assessment of likely root distribution. Any deviation in the RPA from the original circular plot should take account of the:

a) the morphology and disposition of the roots, when influenced by past or existing site conditions (e.g. the presence of roads, structures and underground apparatus);
b) topography and drainage;
c) the soil type and structure;
d) the likely tolerance of the tree to root disturbance or damage, based on factors such as species, age, condition and past management.

In this case the ground within the area of the RPA which is encroached upon is made ground of poor quality and contains old tyres and other building debris and it slopes up and away from the trees therefore it does not provide an ideal rooting environment for the trees. The majority of the trees' rooting area is protected by virtue of being within the neighbour's garden. Given this and the age and condition of the trees the proposed minor ingress into the defined circular RPA will have negligible impact on the trees.

4.3.3 Construction Exclusion zone is defined in the BS5837:2012 3.6 as *'an area based on the root protection area from which access is prohibited for the duration of a project*'.

The attached Tree Protection Plan (PTC/2309/003.02/TPP) indicates the location of the protective fencing parallel the rear boundary of the site. It will be set back at least 1.5 m from the boundary. The fencing will be erected in line with BS5837 and as illustrated in Appendix 3. Unless otherwise agreed in writing with the Local Authority. Site boundary fencing will be erected around the third-party hedges and other shrubbery to be retained on site.

4.4 Protective fencing Installation will be erected prior to demolition and construction taking place on site and remain intact until all construction work has been completed on site. This will create a Construction Exclusion Zone (CEZ) around trees T1-T4.

4.5 Construction of the Retaining Wall The retaining wall will be an engineered designed pile and beam structure. This will allow for minimal excavation as the piles will be bridged by a concrete or steel beam. During installation the piling machine will be located outside the Root Protection Area of the trees.

4.6 Tree Works. Tree work proposals based on my preliminary inspection are set out in the work recommendations column of the tree schedule at the rear of this report. All tree works should be undertaken to BS3998:2010 Tree Works by a competent tree work contractor. All trees works should be timed to be undertaken outside bird nesting season 1st March to 31st August where possible. All trees should be checked for nesting birds prior to works.

4.7 Site management: It is the developer's responsibility to ensure that the details of this Tree Protection Plan and any agreed amendments are known and understood by all site personnel. Copies of the agreed documents must be kept on site at all times and the site manager must brief all personnel who could have an impact on trees on the specific tree protection requirements. This must be a part of the site induction procedures and written into appropriate site management documents.

Section 4: Summary

The defined circular Root Protection Area has been amended in accordance with BS5837:2012 to reflect site conditions and Tree Protection Fencing will be erected and retained in situ during development of the site to create a Construction Exclusion zone

Appendix 1: Survey Methodology

Survey Methodology – Development Sites

A1.1 Survey Trees were surveyed in accordance with BS5837:2012 Section 4. The tree data is set out in the Tree Survey Schedule attached at the end of this report. The tree survey included all trees within influencing distance of the site and that were over 75mm diameter at breast height (1.5m) or as specified by the client.

A1.2 Inspection The trees surveyed were visually inspected from ground level only. No invasive investigations or climbing inspections were undertaken to confirm visual or audible signs of defect or debility and no tissue or soil samples were undertaken.

A1.3 Annotation and numbering The trees are number and individual specimens prefixed with T , so T001, T002 etc, Groups with G, Hedges H, and woodlands W..

A1.4 Species - the trees common name is listed in the tables. Where the scientific name is used for clarification this is in Italics, So for example English oak (*Quercus robur).* Species identification is based on visual observations. Where there is some doubt over tree identity, *spp* is noted after the genus name to indicate that the species cannot be reliably identified at the time of the survey. Where there is more than one species in a group, only the most frequent are noted and not all the species present may be listed

A1.5 Dimensions. All dimensions should be treated as estimates unless specifically indicated as having been measured. Where groups of trees and woodland are recorded, the estimated average dimensions are used to describe the group. The spread of groups is plotted using aerial photography.

A1.6 Height (m) – This is recorded in meters to the nearest 1m. Where practical this is done using a clinometer / hypsometer.

A1.7 Diameter at Breast Heigh (DBH) (mm) – The stem diameter is measured at 1.5m above ground level with a girth tape and given in millimetres (mm) it is recorded in 5cm increments. Where direct measurement is not possible due to access or vegetation the diameter is estimated. Where trees have multiple stems, or untypical form the diameter is measured in accordance with BS 5837:2012 Annex C.

A1.8 Crown spread (m) – This is the average estimated radial spread of the branches of the tree recorded in metres to the nearest 0.5m. Where relevant the cardinal points for the canopy spread for individual trees are recorded. Where access was not possible to measure the spread of the canopy, such distances have been estimated by eye or informed by aerial photography.

A1.9 Crown clearance (m) The distance between the ground level and the first significant branch or radial tree crown, whichever is the lower, has been estimated to the nearest 0.5m in metres. This is only recorded where it is likely to be a constraint on development. This measurement informs the impacts of accessibility and development beneath tree canopies.

A1.10 Age. In planning context, maturity provides a simplistic indication of a tree's ability to cope with change and its potential for further growth. The age of each tree is defined as follows:

- Newly Planted (N)
- Young (Y) - within the first quarter reaching full maturity;
- Semi-Mature (S) - within the second third of reaching full maturity;
- Early-Mature (E) - within the last third of reaching full maturity;
- Mature (M) - specimen at full maturity;
- Late Mature (LM) – A mature tree beginning a natural retrenchment possibly with some veteran features
- Veteran (V) – tree that, by recognised criteria, shows features of biological, cultural or aesthetic value that are characteristic of, but not exclusive to, individuals surviving beyond the typical age range for the species concerned.
- Ancient (A) – as per veteran tree except the tree has survived beyond the typical age range for the species concerned.
- Dead (D)
- Not recorded (X)

A1.11 Condition is recorded as either good, fair, or poor . For each tree, where appropriate, notes on the structural integrity and of physiological condition are provided

A1.12 Comments Other observations were recorded where necessary i.e. details regarding defects, condition, preliminary, presence of pest/disease and perceived significance.

A1.13 Recommendations - - With regard to the management recommendations and tree works required, these are made irrespective of the proposals or where stated to accommodate the proposals. All tree works should be carried out to BS 3998:2010 Recommendations for Tree Work

A1.14 Root Protection Area (RPA) radius (m). The Tree Survey and Tree Constraints Plan shows the approximate extent of Root Protection Areas (RPAs) plotted as a circle around the tree. The RPAs have been plotted and calculated in accordance with the methodology set out in Appendices C and D of BS5837:2012, using the tree stem diameter dimensions obtained during the site visit.

Plotted RPAs serve as a layout design tool indicating the minimum area around a tree deemed to contain sufficient roots and rooting volume to maintain the tree's viability, and where the protection of the roots and soil structure is treated as a priority.

The RPA around groups is shown as a 1m buffer. dependant on the components of the group, a larger RPA may be required and where this is the case it is noted in the text of the main report.

A1.15 Root Protection Area (RPA) Area (m^2). This is the area required. Although plotted as a circle of the TCP. Where pre-existing site conditions or other factors indicate that rooting may occur asymmetrically there is some scope based on sound arboicultural assessment of root distribution to alter the shape and location of the RPA polygon.

In accordance with section 4.6 of BS5837:2012 any deviation in the RPA from the original circular plot should take account of the following factors whilst still providing adequate protection for the root system:

i) the morphology and disposition of the roots, when influenced by past or existing site conditions (e.g. the presence of roads, structures and underground apparatus);
ii) topography and drainage;
iii) the soil type and structure;
iv) the likely tolerance of the tree to root disturbance or damage, based on factors such as species, age, condition and past management.

While developing within RPAs should be avoided, special working methods can be adopted to alleviate the RPA disturbance for cases where the development is considered necessary and unavoidable.

A1.16 Remaining contribution (Years). This is the estimated life expectancy of the tree in given the current conditions and reflects the Tree Quality Assessment recorded as 40+, 20+ or 10+.

A1.17 Tree Quality Assessment Gradings BS cat The value of trees have been assessed in accordance with the BS5837:2012 Cascade Chart for Tree Quality Assessment

Appendix 2: Statutory Controls and Planning Policy / legislation

A2.1 Town and Country Planning Act1990 (as amended) 'The Act'

Section 197 of the act makes it a duty of the local planning authority to ensure, whenever it is appropriate, that in granting planning permission for any development adequate provision is made for the preservation or planting of trees; Also see A1.2 – Protected trees

A2.1.2 National Planning Policy Framework (NPPF) 2012 Rev. 2021

This sets out government planning policies for England and how these are expected to be applied. The key relevant sections are:

Section 131 Incorporation of existing and new trees into developments
Trees make an important contribution to the character and quality of urban environments and can also help mitigate and adapt to climate change. Planning policies and decisions should ensure that new streets are tree-lined, that opportunities are taken to incorporate trees elsewhere in developments (such as parks and community orchards), that appropriate measures are in place to secure the long-term maintenance of newly-planted trees, and that existing trees are retained wherever possible. Applicants and local planning authorities should work with highways officers and tree officers to ensure that the right trees are planted in the right places, and solutions are found that are compatible with highways standards and the needs of different users.

Section 174 Benefits of Natural Capital and ecosystem services
Planning policies and decisions should contribute to and enhance the natural and local environment by protecting and enhancing valued landscapes and sites of biodiversity. Recognising the wider benefits from natural capital and ecosystem services and other benefits of agricultural land and of trees and woodland. Minimising impacts on and providing net gains for biodiversity.

Section 180 Loss of biodiversity Irreplaceable habitats - ancient woodland and ancient or veteran trees

When determining planning applications, local planning authorities should refuse applications for development resulting in the loss or deterioration of irreplaceable habitats (such as ancient woodland and ancient or veteran trees), unless there are wholly exceptional reasons and a suitable compensation strategy exists.

This section also deals with mitigation for the loss of biodiversity.

A2.1.3 Local plan policy

Local plan policies and development plans are specific to a Local Planning Authority. They support national planning policy and set out the framework for growth and change at the local level for a set period of time.

Local Planning Policy can be supported by other documents such as supplementary planning documents (SPDs) and other planning guidance.

Where appropriate relevant local policies which are set out in the main text of this report

A2.1.4 Council Tree Policy

Local Authorities are advised to have a specific tree and woodland policies. Not all authorities have a publicly available policy. Where appropriate relevant local tree policies which are set out in the main text of this report

A2.2 Protected trees

A2.2.1 Tree Preservation Orders (TPO)

The Town and Country Planning Act1990 (as amended) 'The Act' makes provision for the protection of trees. It is a legal requirement to make a written application to the Local Planning Authority to obtain consent to prune or remove trees that are subject to TPO's. There are certain specified exemptions.

The principal effect of a TPO is to prohibit the: Cutting down, uprooting, topping, lopping, wilful damage, or wilful destruction of trees without the LPAs consent. The cutting of roots is potentially damaging and so, in the Secretary of State's view, requires the LPAs consent. Anyone who, in contravention of a TPO, wilfully damages a tree in a way that is likely to destroy it is guilty of an offence. Anyone found guilty of this offence is liable, if convicted in the Magistrates Court, to a fine of up to £20,000. In serious cases, a person may be committed for trial in the Crown Court and, if convicted, is liable to an unlimited fine.

A2.2.2 Conservation Area

Conservation Areas are areas of special architectural or historical interest with a character or appearance that is desirable to preserve or enhance. Trees may often contribute to the special character of the area.

Where trees are located in a Conservation Area and are over 75mm diameter at 1.5m above ground, level 6 weeks' written notice must be given to the LPA of the intention to carry out works upon or remove trees within a conservation area and not protected by a TPO.

As with TPO's the LPA may prosecute offenders and fines. There is a duty to replace any tree removed without permission.

A2.2.3 Other protection

Planning conditions Local planning authority consent may be required to carry out works upon or remove trees, shrubs and hedges that are the subjects of planning.

Hedgerows Regulations. LPA consent may be required for the removal of hedgerows under the Hedgerow Regulations 1997.

Your Council's planning department will advise whether any of the above controls apply to your trees, shrubs and hedges.

A2.3 Felling Licence - Forestry Act 1967 as amended by the Environment Act 2021

Tree felling is restricted under Forestry Act 1967. Subject to certain exemptions, the Act requires that a licence must be obtained for the felling of growing trees.

There is an exemption from the need for a felling licence for the felling of trees that is immediately required for the purpose of carrying out development that is authorised by the approval of full planning permission.

Your nearest Forestry Commission office will advise whether you require a felling licence.

A2.4 Other relevant designations and legislation

A2.4.1 Protected species

Wildlife and Countryside Act 1981 (as amended) ' The Act'
BATS: Mature trees often contain cavities, crevices and hollows that offer potential habitat for species such as bats and barn owls. Both are afforded protection under the Schedule 5 of the Act. Bats are also protected under The Conservation of Habitats and Species Regulations 2010 (as amended).

Under The Act It is an offence to disturb a roosting bat or damage, destroy or block access to a bat roost, intentionally kill, injure or take a bat, sell, hire, barter or exchange a bat, dead or alive · be in possession or control of a bat or anything derived from a bat.

BIRDS: Trees and hedgerows of most species provide valuable nesting sites for a wide range of birds, and it is likely that nesting birds will be present on the site during the period March to September. Under The Act It is an offence to disturb a nesting bird. Therefore, site clearance and tree works should be undertaken between September and February, or supervised by an ecologist.

Your local Wildlife Trust or your Council's Ecologist will provide guidance on statutory controls relating to wildlife. An Ecology Assessment of the site will provide further details.

.

Appendix 3: PROTECTIVE FENCING SPECIFICATION

Construction Exclusion Zones (CEZs), enclosed by Temporary Protective Fencing, as detailed below and to be agreed with the Local Planning Authority (LPA),

1. The installation of physical tree protection measures must be completed before commencement or works, including the creation of compounds, access by vehicles or plant, delivery of materials, ground investigations or works, or any other construction works
2. Be located as shown on the Arboricultural Method Statement plan.
3. Be installed as per the specification below or as agreed in writing with Local Planning Authority.
4. Be retained in place throughout the development process

5. Prohibited activities in the Construction Exclusion Zones (CEZs),

   - No access for machinery, plant or vehicles
   - No storage of spoil or materials
   - No excavation
   - No fires

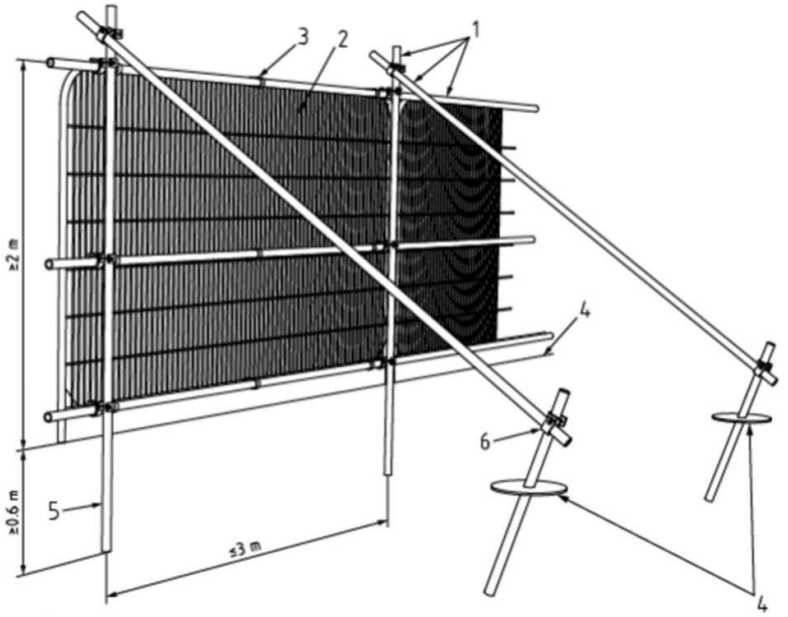

BS5837:2012 Figure 2: Default specification for protective barrier

Key
1. Scaffold poles
2. Heavy gauge 2m galvanised tube and weld mesh infill panels
3. Panels secured to uprights and cross- members with wire ties
4. Ground level
5. Up rights drive into the ground until secure (min depth .6m)
6. Standard scaffold clips



Recommended signage for fencing.

Appendix 4 - Report Limitations

A4.1 Liability The information collected in relation to the trees is adequate for the purposes of this report only. Peak Tree Consultancy Ltd shall not be liable for any use of this report other than for the purposes for which it was produced.

A4.2 Validity. Owing to the dynamic nature of arboricultural features, the assessment of tree condition and structural potential and the contents of this report are valid at the time for 12 months. Validity of the report assumes absence of inclement weather and no change in the trees existing context. If more than 12 months have elapsed since the date of this report, further advice must be taken before you rely on the contents of this report Reliance should not be given to comments made in respect of other disciplines i.e. landscape, ecology or civil engineering without first consulting an appropriate expert.

A4.3 Data collection. The comments made are based on observable factors present at the time of inspection. Observations were made from ground level and no climbing inspection was undertaken No invasive investigations or underground excavations were undertaken unless specifically stated. There may be hidden defects.

In some case the inspection of the base of the trees were restricted by ivy, debris, vegetation etc. Where access to a tree is not possible, best judgement/estimation will be used

The inspection and assessment was undertaken based on the documents provided.

A4.4 Risk assessment. This assessment has been prepared in respect of the proposed development and should not be interpreted as a report on tree health and safety. Reasonable effort has been made to identify visible defects whilst undertaking the tree survey; trees are however, prone to natural failure without warning therefore no guarantee can be made as to the absolute safety of any of the trees surveyed. We only undertake detailed risk assessments when instructed in writing to do so.

A4.5 Potential damage to buildings. An assessment of the potential influence of trees upon existing buildings or other structures resulting from the effects of trees upon shrinkable load-bearing soils or the effects of incremental root or branch growth, are specifically excluded from this report. This report is not intended for use in conjunction with the NHBC guidance for calculating foundation depths.

A4.6 Alterations to site proposals. Any alteration to the application site or development proposals could change the current circumstances and may invalidate this report and any recommendations made.

A4.7 Wildlife The Wildlife and Countryside Act 1981 (as amended) makes it an offence to disturb nesting birds or recklessly endanger a bat or its roost. Bats are also a European protected species and are additionally protected under the Conservation (Habitats & c) Regulations 1994 and 2010 (as amended). The survey findings, constraints, opportunities and design or mitigation recommendations included within that report must be read alongside any ecology or protect species reports.

A4.8 Tree works A lack of recommended work does not imply that a tree does not pose an unacceptable level of risk and likewise, it should not be implied that a tree will present an acceptable level of risk following the completion of any recommended work.

A4.9 Plans The diagrams and drawings provided by Peak Tree Consultancy Ltd are not exact and should not be used for design purposes unless directed otherwise. They are however indicative of site features.

Plans and Survey data

Tree Survey Schedule (TSS) Ref: PTC/2309/003.01/TSS

Tree Protection Proposals (TPP) Ref: PTC/2309/003.01/TPP

All plans can only be used for dealing with the tree issues and all scaled measurements must be checked against the original submission documents.

Tree Survey Schedule (TSS PTC/2309/003.1/TSS) – Land adjacent to 4 Haywards Close, Glossop

Tree No	Species	Age Class	Height (m)	Crown Spread (ave)	DBH (mm)	RPA (m2)	RPA radius	Comments	Recommendations	BS cat
T1	Poplar	M	25	8*	500*	113.11	6	Third party tree approx. 0.75m from boundary	Erected tree protection fencing during construction	B1, 2
T2	Poplar	M	25	8*	450*	91.62	5.4	Third party tree approx. 1m from boundary This tree has recently lost secondary branch and has slime flux from old pruning wound on the stem	Erected tree protection fencing during construction. Crown lift lower over hanging branches to no more than 5m above ground level to give clearance for access if required.	B1, 2
T3	Poplar	M	25	8*	450*	91.62	5.4	Third party tree approx. 1.5m from the boundary	Erected tree protection fencing during construction	B1, 2
T4	Poplar	M	16	8*	400*	72.39	4.8	Third party tree approximately 4m to boundary This tree has been topped in the past and there is some bark dieback where it has been pruned	Erected tree protection fencing during construction	B1, 2

All works to be undertaken to BS3998 : 2010

*Estimated dimensions.

Arboricultural Method Statement

Land adjacent to
4 Haywards Close
Glossop SK13

Tree Protection Plan

PTC/2309/003.02/TPP

Survey: 24/4/2023
Drawing: 11/5/2023

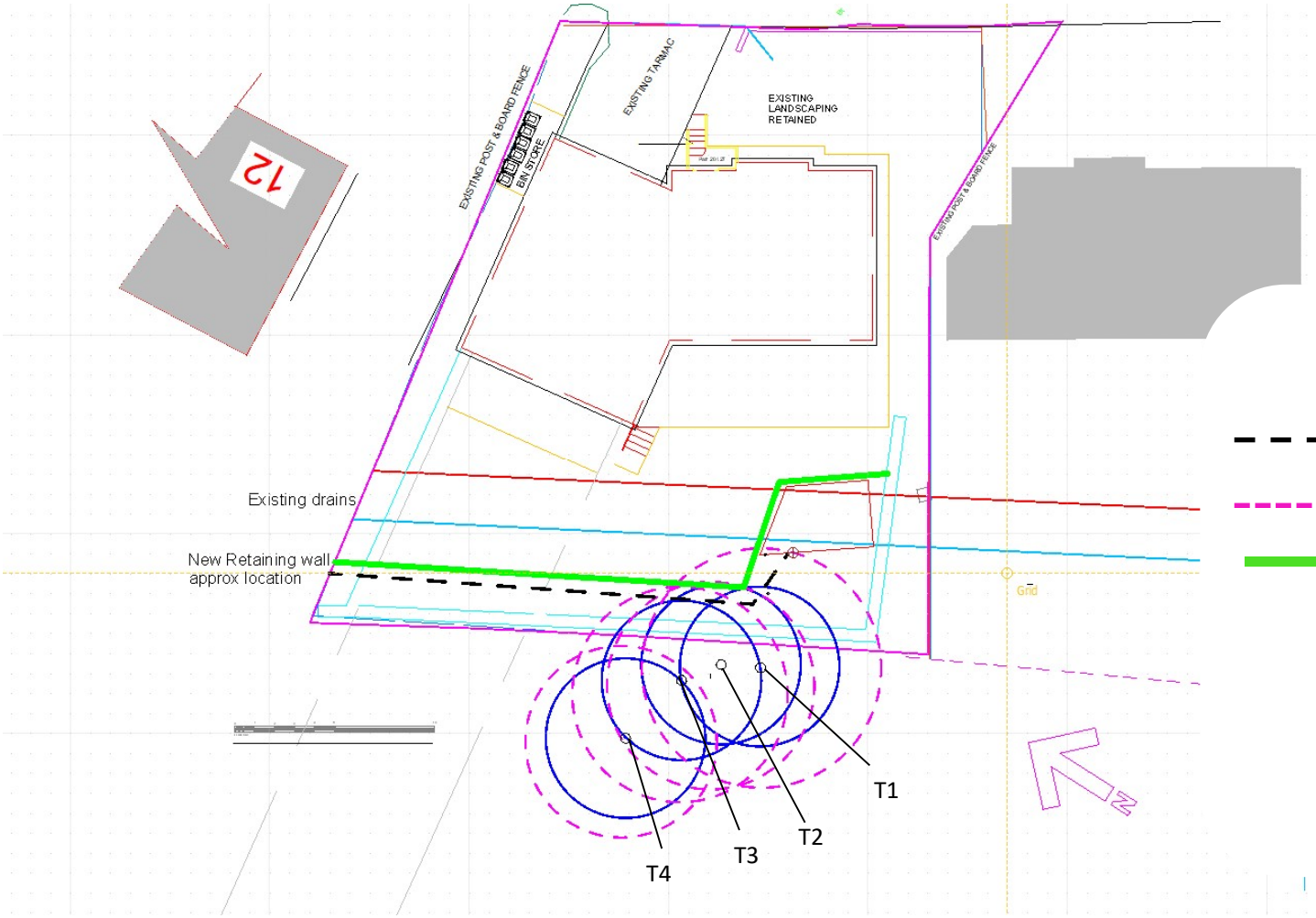

Protective fencing

Circular Root Protection Area

New Retaining wall approx.