Peak Tree Consultancy

Arboricultural Impact Assessment

Site: 26 Meadowfield Close

Hadfield

Derbyshire

SK13 2BL

Site Ref:PTC/2321

Prepared for: Robert Murdoch

Date:6/7/2023

Ref No: PTC/2321/003.01

Peak Tree Consultancy Ltd is a registered company England and Wales company No 13926128

Contact Details

Peak Tree Consultancy
106 Mottram Road, Broadbottom, Cheshire SK146BB
Tel: 07979 427 221
Email: Info@PeakTreeConsultancy.com

Report Dates

	Date	Ref	Author	Status
Inspection	5/7/2023	PTC/2321/003.1	Monica Gillespie	Completed
Report	6/7/2023	PTC/2321/003.1	Monica Gillespie	Completed

Copyright

This report, all plans, illustrations, and other associated material remains the property of Peak Tree Consultancy Ltd until paid for in full. Copyright and intellectual property rights remain with Peak Tree Consultancy Ltd. The contents of this document must therefore not be copied or reproduced in whole or in part for any purpose without the written consent of Peak Tree Consultancy Ltd

Contents

Summary

1.0 Introduction
2.0 The Site
3.0 Baseline Information and Tree Survey
4.0 Arboricultural Impact Assessment
5.0 Proposals to Mitigate Arboricultural Impact
6.0 Conclusions and Recommendations

Appendices

Appendix 1: BS5837:2012 - Cascade Chart for Tree Quality Assessment
Appendix 2: Statutory Controls and Planning Policy / legislation
Appendix 3 Survey Methodology
Appendix 4: Standard tree protection fencing specification
Appendix 4: Professional Profile
Appendix 5: Report Limitations

Plans and Survey data.

Tree Survey Schedule (TSS Ref: PTC/2321/003.1/TSS)
Tree Constraints Plan (TCP) (Ref: PTC/2321/003.1/TCP)
Tree Protection Proposals (TPP) Ref: PTC/2321/003.01/TPP

Summary

1.0 26 Meadowfield Close Hadfield is a detached property located to the south of Hadfield town centre. Peak Tree Consultancy Ltd have been instructed to provide an Arboricultural Impact Assessment and recommendations for tree protection in relation to the proposal to demolish the existing conservatory and construct on broadly the same footprint a new single-story extension.

This report has been prepared to support the planning application and address any impact on the existing trees.

2.0 There are no protected trees effected by these proposals. National and local planning constraints, legislation and guidance have been reviewed in relation to the proposals.

3.0 3 trees were surveyed and 2 trees are potentially impacted on by this proposal. The Tree Survey Schedule (TSS) and the Tree Constraints Plan (TCP) can be found at the end of this report. The trees were categorised based on their quality and contribution to amenity.

	Category A high quality & life expectancy 40 years+	Category B Moderate quality & life expectancy 20 years+	Category C low quality & life expectancy 10 years+ Or young trees	Category U Can't be retained in current context for more than 10 years
Trees		1	1	1

Table 1: BS5837:2012 Category Grading of arboricultural features (See Appendix 1 for an explanation of the categories)

4.0 Arboricultural Impact Assessment

- None of the Root Protection Areas (RPA) of the trees to be retained encroach into the footprint of the proposed extension.
- Two trees (T1 and T2) and the existing landscaping in the rear garden are to be retained and protected during construction. One tree (T3) close to the house is to be removed irrespective of the construction of the proposed extension.

5.0 Proposals to mitigate arboricultural impact.

- The Root Protection Area of T1 and T2 will be fenced off during construction works to avoid damage to the roots of these trees.

- The proposals will have no impact on the existing tree cover and therefore are in line with High Peak Borough Council Local plan policy EQ9.

1. Introduction

1.1 Instruction: This Arboricultural Impact Assessment (AIA) was commissioned by Mr Robert Murdoch in relation to the proposed demolition of an existing conservatory and the replacement with a single-story extension at 26 Meadowfield Close (referred to as 'The Site'). We have been instructed to provide:

- A tree schedule of the relevant trees including basic data and a condition assessment to comply with the general requirements of BS5837:2012 – Trees in Relation to Design, Demolition and Construction - Recommendations (BS5837:2012)
- Produce a Tree Constraints Plan (TCP).
- An Arboricultural Impact Assessment (AIA). An appraisal of the impact of the proposal on trees and any resulting impact that has on the local amenity.
- Preliminary advice on protective measures and management for the trees to be retained

1.2 Documents provided by the client:

Document	Reference	Author	Date
Proposed and existing plans	23025	P4B-Extend	Undated

1.3 To make this report easier to use, the emphasis is on keeping the main text concise with minimal background explanations. Where appropriate, further explanations and information are included as appendices. Key points and findings are highlighted.

1.4 The site assessment of the existing trees on the site has been guided by BS5837:2012 – Trees in Relation to Design, Demolition and Construction - Recommendations and industry best practice. The assessment of the trees has been undertaken to assist in determining which trees would be suitable or unsuitable for retention. A detailed description of the assessment criteria is given at Appendix 1 in the Cascade Chart for Tree Quality Assessment

1.5 Arboricultural assessment of development proposals can be divided into 4 stages:

1. Base line tree surveyed and Tree Constraints Plan (TCP) This is an assessment designed to help assess feasibility for the site and inform the design process by setting out the constraints of existing tree cover. This may be suitable for pre-planning application or outline planning submission.

2. Arboricultural Impact Assessment (AIA) an initial assessment of the impact on existing tree cover of detailed proposals to be submitted with a full planning application or reserved matters application.

3. Arboricultural Method Statement (AMS) Providing details of tree protection and management recommendations to be implemented during the construction phase. To accompany a full planning application, a reserved matters application or for the discharge of planning conditions

4. Site supervision and post development management. When planning consent is granted ongoing arboricultural input may be required during construction to ensure effect management of tree protection measures and discharge of conditions. This may be required as a condition of the planning approval

Section 1: Summary

This report includes a baseline tree survey (TSS), a Tree Constraints Plan (TCP) and an Arboricultural Impact Assessment (AIA). The report also includes a preliminary tree protection plan based on the proposed layout. This may require amendment if there are significant changes to the proposals.

2.0 The Site

2.1 Site description

The property is a detached dwelling located to the south of Hadfield centre. The location is shown in Figure 1 below.



Figure 1. Site location 26 Meadowfield Close, Hadfield 'The site'

The proposal is to remove the existing conservatory and replace it with a single-story extension using broadly the same footprint as the conservatory. Access will be obtained via existing driveway and hardstanding areas.

2.2 Planning Constraints

2.2.1 National Planning Policy: The Local Planning Authority (LPA) has a statutory obligation to ensure adequate provision is made for the preservation of trees through section 197 of the Town and County Planning Act 1990. The National Planning Policy Framework (NPPF) 2012 and subsequent revisions, sets out the government's planning policies for England and how these are expected to be applied.

2.2.2 Local Planning Policy: High Peak Borough Council 2016 includes the following policy in relation to trees:

> Policy EQ 9 Trees, Woodland and Hedgerows
>
> The Council will protect existing trees, woodlands and hedgerows, in particular, ancient woodland, veteran trees and ancient or species-rich hedgerows from loss or deterioration.
>
> This will be achieved by:
>
> - Requiring that existing woodlands, healthy, mature trees and hedgerows are retained and integrated within a proposed development unless the need for, and benefits of, the development clearly outweigh their loss.
> - Requiring new developments where appropriate to provide tree planting and soft landscaping, including where possible the replacement of any trees that are removed at a ratio of 2:1
> - Resisting development that would directly or indirectly damage existing ancient woodland, veteran trees and ancient or species-rich hedgerows.

A detailed review of local planning policy has not been undertaken and other policies may have implications for trees that may need consideration.

2.2.3 Protected trees: A preliminary check for protected trees was undertaken using High Peak Borough Council's and Derbyshire County Council's Interactive planning map. The property is not within a Conservation Area and there are no Tree Preservation Orders on trees in or immediately adjacent to the site.

2.3 Habitat and protected species: The Wildlife and Countryside Act 1981, (as amended), provides statutory protection to birds, bats and other species that inhabit trees. These could impose constraints on the use and timing of access to the site in addition to any of the tree matters considered in this report. It is likely that nesting birds will be present on the site during the period March to September. These issues are beyond the scope of this report, and you must seek advice from an ecologist to check if any such constraints apply to this site.

2.4 Additional information Further detail about statutory controls planning policy and legislation is set out in Appendix 2

Section 2: Summary

National and local planning constraints, legislation and guidance have been reviewed in relation to the proposals. There are no protected trees effected by this proposal.

3.0 Baseline Information and Tree Survey

3.1 **The Survey**: The site was surveyed by Monica Gillespie on 5/7/2023. The data was collected in line with section 4.4 of BS 5837. All observations were from ground level without detailed investigations, and all dimensions should be treated as estimates unless otherwise indicated. The weather at the time of inspection was warm and overcast with good visibility. A detailed survey methodology is attached at **Appendix 3.**

3.2 **Schedule and Plans:** The tree survey schedule (TSS) (Ref: **PTC/2321/003.1/TSS**) and the Tree Constraints Plan (TCP) (Ref: **PTC/2321/003.1/TCP**) are attached to this report.

3.3 **Root Protection Areas (RPA's):** the RPA is the minimum area required to ensure there is sufficient roots and rooting volume to maintain the trees vitality. This was calculated in accordance with table D.1 and Section 4.6 of BS 5837 and as described at **Appendix 3 at A.3.14.** The figures are given the tree survey schedule (Ref: **PTC/2308/003.1/TSS**) and the RPA is illustrated as a magenta dashed circle on the Tree Constraints Plan (Ref: **PTC/2321/003.1/TCP**).

3.4 **Survey summary:** A total of **3 trees** were surveyed. All these trees are within the site.

3.5 **The Tree Quality Assessment**
Each tree or group recorded was given a tree quality assessment category in accordance with:BS5837:2012. The categorisation is summarised in **Table 1** below.

Section 3: Summary

	Category A high quality & life expectancy 40 years+	**Category B** Moderate quality & life expectancy 20 years+	**Category C** low quality & life expectancy 10 years+ Or young trees	**Category U** Can't be retained in current context for more than 10 years
Trees		1	1	1

Table 1: BS5837:2012 Category Grading of arboricultural features (See **Appendix 1** for an explanation of the categories)

4.0 Arboricultural Impact Assessment

4.1 The Proposals

The proposed scheme for a single-story extension utilises the footprint of the existing conservatory with only a very minor increase in the footprint to accommodate a rectangular structure. New foundations will be required. The existing conservatory and surrounding patio area are at a lower level than the lawned are where the tree to be retained area located. This area is separated by a retaining wall.



Figure 2: Location of proposed extension

4.2 The Root Protection Areas (RPA) were calculated for all the trees recorded in the survey and plotted the Tree constraints plan appended to this report PTC/2321/003.01/TCP.

4.2 Weeing Willow T1

4.2.1 This tree is located in the rear garden of the property within the raised lawned area. The tree has a history of pruning and has previously been reduced in height. This tree has a high growth potential and, in this situation, it would be advisable to maintain the tree by periodic pruning.

4.2.2 The tree is located 7.8m from the existing extension and 6.2m from the retaining wall around the patio area. Behind the retain wall is an additional paved area. This tree requires a Root Protection Area (RPA) with a radius of 6.48m. BS5837:2012 allows for minor adjustments to the RPA in certain circumstances. In this case the most appropriate location for temporary protective fencing would be along the edge of the paving area so that the lawn area becomes a construction exclusion zone as illustrated in the Tree Protection Proposals (TPP) Ref: PTC/2321/003.01/TPP



Figure 3: Weeping willow (T1) and Rowan (T2)

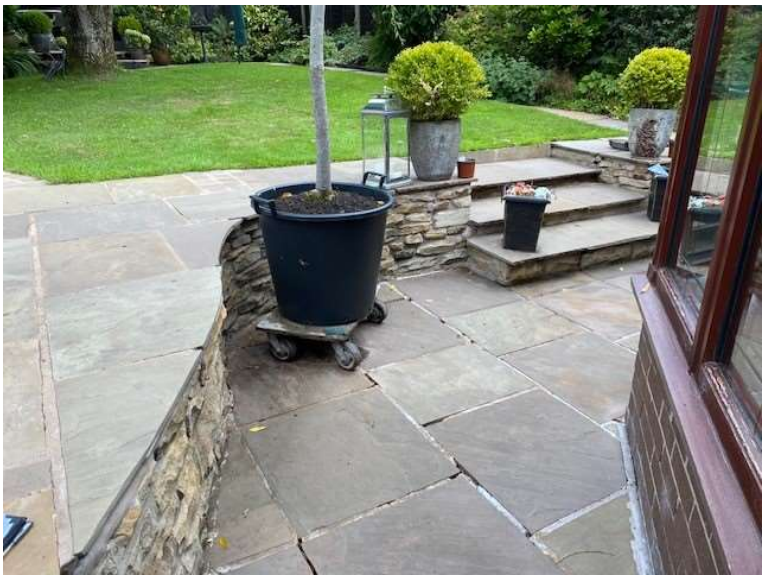

Figure 4: Retaining wall and paved areas.

4.2.3 Other trees and shrubs

The rowan (T2) will also be within the construction exclusion zone and will not be impacted on by the proposals.

The spruce (T3) is to be removed regardless of the proposals. This tree has a high growth potential and it is not planted in a suitable location for its long-term retention.

The garden at 26 Meadowfield is mature and well cared for and there are various ornamental shrubs and small trees the intention is that this shall all be retained.



Figure 5: The spruce (T3)

Section 4: Summary

No trees will be removed or pruned to accommodate the proposals. Retained trees can be protected in line with BS5837:2012.

5.0 Proposals to Mitigate Arboricultural Impact

5.1 **Protection of retained trees**: Construction activity can adversely affect trees if appropriate protective measures are not taken.

5.2 **Protective fencing** will be erected prior to demolition and construction taking place on site and remain intact until all construction work has been completed on site. This will create a **Construction Exclusion Zone** (CEZ) around trees **T2.** A **Construction Exclusion zone** is defined in the **BS5837:2012 3.6 as** *'an area based on the root protection area from which access is prohibited for the duration of a project'.*

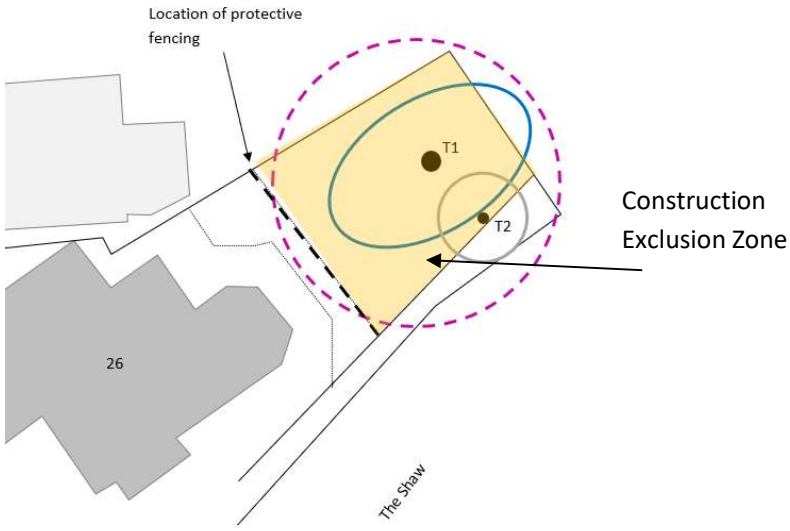

Figure 5: Proposed location of protective fencing around T1 and T2

The fencing should be constructed in line with BS5837:2012 or as otherwise agreed in writing with the Local Planning Authority. A standard specification for fencing is attached at **Appendix 4.** As this is a small-scale development an alternative to heras fencing may be more practical and still adequately serve to protect the ground around the trees. For example chestnut paling or orange netting attached to fence posts and clearly signed advising that it is a tree protection area / Construction exclusion zone.

5.3 **Summary of impact on local amenity** with mitigation/tree protection proposals there will be no detrimental impact on the trees which will affect local amenity as a result of these proposals.

Section 5: Summary The impact on trees **T1** and **T2** can be avoided by using tree protection fencing and a Construction Exclusion Zone (CEZ) in accordance with BS5837:2012

6.0 Conclusions and Recommendations

6.1 This report provides the arboricultural information required to assist the Local Planning Authorities assessment of the planning proposals. The information is in line with the recommendations of BS5837:2012.

6.2 No trees will need to be removed to accommodate the implementation of this development 2 trees (T1 and T2) will be protected during demolition and construction.

6.3 The proposals accord with High Peak Borough Council's Local plan policy EQ9. The proposals provide for the protection and integration of existing trees. The proposal do not impact on any ancient woodland or veteran/ancient tree.

6.5 There will be no impact on the trees and therefore local amenity as a result of these proposals.

Appendix 1: BS5837:2012 Cascade Chart for Tree Quality Assessment

TREES UNSUITABLE FOR RETENTION		
Category and Definition	**Criteria**	**Identification on Plan**
Category U Those in such a condition that they cannot realistically be retained as living trees in the context of the current land use for longer than 10 years.	• Trees that have a serious, irremediable, structural defect, such that their early loss is expected due to collapse, including those that will become unviable after removal of other Category U trees (e.g., where, for whatever reason, the loss of companion shelter cannot be mitigated by pruning). • Trees that are dead or are showing signs of significant, immediate, and irreversible overall decline. • Trees infected with pathogens of significance to the health and/or safety of other trees nearby, or very low-quality trees suppressing adjacent trees of better quality. *NOTE: Category U trees can have existing or potential conservation value which it might be desirable to preserve; see 4.5.7*	

TREES TO BE CONSIDERED FOR RETENTION				
Category and Definition	**Criteria**			
	1. Mainly Arboricultural qualities	2. Mainly landscape qualities	3 Mainly Cultural Values	**Identification on Plan**
Category A Trees of high quality with an estimated remaining life expectancy of at least 40 years.	Trees that are particularly good examples of their species, especially if rare or unusual; or those that are essential components of groups or formal or semi-formal arboricultural features (e.g., the dominant and/or principal trees within an avenue.)	Trees, groups or woodlands of particular visual importance as arboricultural and/or landscape features.	Trees, groups or woodlands of significant conservation, historical, commemorative or other value (e, veteran trees or wood-pasture).	
Category B Trees of moderate quality with an estimated remaining life expectancy of at least 20 years	Trees that might be included in category A, but are downgraded because of impaired condition (e.g., presence of significant though remediable defects, including unsympathetic past management and storm damage), such that they are unlikely to be suitable for retention for beyond 40 years; or trees lacking the special quality necessary to merit the category A designation	Trees present in numbers, usually growing as groups or woodlands, such that they attract a higher collective rating than they might as individuals; or trees occurring as collectives but situated so as to make little visual contribution to the wider locality	Trees with material conservation or other cultural value.	
Category C Trees of low quality with an estimated remaining life expectancy of at least 10 years, or young trees with a stem diameter below 150mm.	Unremarkable trees of very limited merit or such impaired condition that they do not qualify in higher categories.	Trees present in groups or woodlands, but without this conferring on them significantly greater collective landscape value, and/or trees offering low or only temporary/transient landscape benefits.	Trees with no material conservation or other cultural value.	

Appendix 2: Statutory Controls and Planning Policy / legislation

A2.1 Town and Country Planning Act1990 (as amended) 'The Act'

Section 197 of the act makes it a duty of the local planning authority to ensure, whenever it is appropriate, that in granting planning permission for any development adequate provision is made for the preservation or planting of trees; Also see A1.2 – Protected trees

A2.1.2 National Planning Policy Framework (NPPF) 2012 Rev. 2021

This sets out government planning policies for England and how these are expected to be applied. The key relevant sections are:

Section 131 Incorporation of existing and new trees into developments
Trees make an important contribution to the character and quality of urban environments and can also help mitigate and adapt to climate change. Planning policies and decisions should ensure that new streets are tree-lined, that opportunities are taken to incorporate trees elsewhere in developments (such as parks and community orchards), that appropriate measures are in place to secure the long-term maintenance of newly-planted trees, and that existing trees are retained wherever possible. Applicants and local planning authorities should work with highways officers and tree officers to ensure that the right trees are planted in the right places, and solutions are found that are compatible with highways standards and the needs of different users.

Section 174 Benefits of Natural Capital and ecosystem services
Planning policies and decisions should contribute to and enhance the natural and local environment by protecting and enhancing valued landscapes and sites of biodiversity. Recognising the wider benefits from natural capital and ecosystem services and other benefits of agricultural land and of trees and woodland. Minimising impacts on and providing net gains for biodiversity.

Section 180 Loss of biodiversity Irreplaceable habitats - ancient woodland and ancient or veteran trees

When determining planning applications, local planning authorities should refuse applications for development resulting in the loss or deterioration of irreplaceable habitats (such as ancient woodland and ancient or veteran trees), unless there are wholly exceptional reasons and a suitable compensation strategy exists.

This section also deals with mitigation for the loss of biodiversity.

A2.1.3 Local plan policy

Local plan policies and development plans are specific to a Local Planning Authority. They support national planning policy and set out the framework for growth and change at the local level for a set period of time.

Local Planning Policy can be supported by other documents such as supplementary planning documents (SPDs) and other planning guidance.

Where appropriate relevant local policies which are set out in the main text of this report

A2.1.4 Council Tree Policy

Local Authorities are advised to have a specific tree and woodland policies. Not all authorities have a publicly available policy. Where appropriate relevant local tree policies which are set out in the main text of this report

A2.2 Protected trees

A2.2.1 Tree Preservation Orders (TPO)

The Town and Country Planning Act1990 (as amended) 'The Act' makes provision for the protection of trees. It is a legal requirement to make a written application to the Local Planning Authority to obtain consent to prune or remove trees that are subject to TPO's. There are certain specified exemptions.

The principal effect of a TPO is to prohibit the: Cutting down, uprooting, topping, lopping, wilful damage, or wilful destruction of trees without the LPAs consent. The cutting of roots is potentially damaging and so, in the Secretary of State's view, requires the LPAs consent. Anyone who, in contravention of a TPO, wilfully damages a tree in a way that is likely to destroy it is guilty of an offence. Anyone found guilty of this offence is liable, if convicted in the Magistrates Court, to a fine of up to £20,000. In serious cases, a person may be committed for trial in the Crown Court and, if convicted, is liable to an unlimited fine.

A2.2.2 Conservation Area

Conservation Areas are areas of special architectural or historical interest with a character or appearance that is desirable to preserve or enhance. Trees may often contribute to the special character of the area.

Where trees are located in a Conservation Area and are over 75mm diameter at 1.5m above ground, level 6 weeks' written notice must be given to the LPA of the intention to carry out works upon or remove trees within a conservation area and not protected by a TPO.

As with TPO's the LPA may prosecute offenders and fines. There is a duty to replace any tree removed without permission.

A2.2.3 Other protection

Planning conditions Local planning authority consent may be required to carry out works upon or remove trees, shrubs and hedges that are the subjects of planning.

Hedgerows Regulations. LPA consent may be required for the removal of hedgerows under the Hedgerow Regulations 1997.

Your Council's planning department will advise whether any of the above controls apply to your trees, shrubs and hedges.

A2.3 Felling Licence - Forestry Act 1967 as amended by the Environment Act 2021

Tree felling is restricted under Forestry Act 1967. Subject to certain exemptions, the Act requires that a licence must be obtained for the felling of growing trees.

There is an exemption from the need for a felling licence for the felling of trees that is immediately required for the purpose of carrying out development that is authorised by the approval of full planning permission.

Your nearest Forestry Commission office will advise whether you require a felling licence.

A2.4 Other relevant designations and legislation

A2.4.1 Protected species

Wildlife and Countryside Act 1981 (as amended) ' The Act'
BATS: Mature trees often contain cavities, crevices and hollows that offer potential habitat for species such as bats and barn owls. Both are afforded protection under the Schedule 5 of the Act. Bats are also protected under The Conservation of Habitats and Species Regulations 2010 (as amended).

Under The Act It is an offence to disturb a roosting bat or damage, destroy or block access to a bat roost, intentionally kill, injure or take a bat, sell, hire, barter or exchange a bat, dead or alive · be in possession or control of a bat or anything derived from a bat.

BIRDS: Trees and hedgerows of most species provide valuable nesting sites for a wide range of birds, and it is likely that nesting birds will be present on the site during the period March to September. Under The Act It is an offence to disturb a nesting bird. Therefore, site clearance and tree works should be undertaken between September and February, or supervised by an ecologist.

Your local Wildlife Trust or your Council's Ecologist will provide guidance on statutory controls relating to wildlife. An Ecology Assessment of the site will provide further details.

Appendix 3: Survey Methodology

Survey Methodology – Development Sites

A3.1 Survey Trees were surveyed in accordance with BS5837:2012 Section 4. The tree data is set out in the Tree Survey Schedule attached at the end of this report. The tree survey included all trees within influencing distance of the site and that were over 75mm diameter at breast height (1.5m) or as specified by the client.

A3.2 Inspection The trees surveyed were visually inspected from ground level only. No invasive investigations or climbing inspections were undertaken to confirm visual or audible signs of defect or debility and no tissue or soil samples were undertaken.

A3.3 Annotation and numbering The trees are number and individual specimens prefixed with T , so T001, T002 etc, Groups with G, Hedges H, and woodlands W..

A3.4 Species - the trees common name is listed in the tables. Where the scientific name is used for clarification this is in Italics, So for example English oak (*Quercus robur).* Species identification is based on visual observations. Where there is some doubt over tree identity, *spp* is noted after the genus name to indicate that the species cannot be reliably identified at the time of the survey. Where there is more than one species in a group, only the most frequent are noted and not all the species present may be listed

A3.5 Dimensions. All dimensions should be treated as estimates unless specifically indicated as having been measured. Where groups of trees and woodland are recorded, the estimated average dimensions are used to describe the group. The spread of groups is plotted using aerial photography.

A3.6 Height (m) – This is recorded in meters to the nearest 1m. Where practical this is done using a clinometer / hypsometer.

A3.7 Diameter at Breast Heigh (DBH) (mm) – The stem diameter is measured at 1.5m above ground level with a girth tape and given in millimetres (mm) it is recorded in 5cm increments. Where direct measurement is not possible due to access or vegetation the diameter is estimated. Where trees have multiple stems, or untypical form the diameter is measured in accordance with BS 5837:2012 Annex C.

A3.8 Crown spread (m) – This is the average estimated radial spread of the branches of the tree recorded in metres to the nearest 0.5m. Where relevant the cardinal points for the canopy spread for individual trees are recorded. Where access was not possible to measure the spread of the canopy, such distances have been estimated by eye or informed by aerial photography.

A3.9 Crown clearance (m) The distance between the ground level and the first significant branch or radial tree crown, whichever is the lower, has been estimated to the nearest 0.5m in metres. This is only recorded where it is likely to be a constraint on development. This measurement informs the impacts of accessibility and development beneath tree canopies.

A3.10 Age. In planning context, maturity provides a simplistic indication of a tree's ability to cope with change and its potential for further growth. The age of each tree is defined as follows:

- Newly Planted (N)
- Young (Y) - within the first quarter reaching full maturity;
- Semi-Mature (S) - within the second third of reaching full maturity;
- Early-Mature (E) - within the last third of reaching full maturity;
- Mature (M) - specimen at full maturity;
- Late Mature (LM) – A mature tree beginning a natural retrenchment possibly with some veteran features
- Veteran (V) – tree that, by recognised criteria, shows features of biological, cultural or aesthetic value that are characteristic of, but not exclusive to, individuals surviving beyond the typical age range for the species concerned.
- Ancient (A) – as per veteran tree except the tree has survived beyond the typical age range for the species concerned.
- Dead (D)
- Not recorded (X)

A3.11 Condition is recorded as either good, fair, or poor . For each tree, where appropriate, notes on the structural integrity and of physiological condition are provided

A3.12 Comments Other observations were recorded where necessary i.e. details regarding defects, condition, preliminary, presence of pest/disease and perceived significance.

A3.13 Recommendations - - With regard to the management recommendations and tree works required, these are made irrespective of the proposals or where stated to accommodate the proposals. All tree works should be carried out to BS 3998:2010 Recommendations for Tree Work

A3.14 Root Protection Area (RPA) radius (m). The Tree Survey and Tree Constraints Plan shows the approximate extent of Root Protection Areas (RPAs) plotted as a circle around the tree. The RPAs have been plotted and calculated in accordance with the methodology set out in Appendices C and D of BS5837:2012, using the tree stem diameter dimensions obtained during the site visit.

Plotted RPAs serve as a layout design tool indicating the minimum area around a tree deemed to contain sufficient roots and rooting volume to maintain the tree's viability, and where the protection of the roots and soil structure is treated as a priority.

The RPA around groups is shown as a 1m buffer. dependant on the components of the group, a larger RPA may be required and where this is the case it is noted in the text of the main report.

A3.15 Root Protection Area (RPA) Area (m^2). This is the area required. Although plotted as a circle of the TCP. Where pre-existing site conditions or other factors indicate that rooting may occur asymmetrically there is some scope based on sound arboicultural assessment of root distribution to alter the shape and location of the RPA polygon.

In accordance with section 4.6 of BS5837:2012 any deviation in the RPA from the original circular plot should take account of the following factors whilst still providing adequate protection for the root system:

i) the morphology and disposition of the roots, when influenced by past or existing site conditions (e.g. the presence of roads, structures and underground apparatus);
ii) topography and drainage;
iii) the soil type and structure;
iv) the likely tolerance of the tree to root disturbance or damage, based on factors such as species, age, condition and past management.

While developing within RPAs should be avoided, special working methods can be adopted to alleviate the RPA disturbance for cases where the development is considered necessary and unavoidable.

A3.16 Remaining contribution (Years). This is the estimated life expectancy of the tree in given the current conditions and reflects the Tree Quality Assessment recorded as 40+, 20+ or 10+.

A3.17 Tree Quality Assessment Gradings BS cat The value of trees have been assessed in accordance with the BS5837:2012 Cascade Chart for Tree Quality Assessment (See Appendix 1).

Appendix 4: PROTECTIVE FENCING SPECIFICATION

Construction Exclusion Zones (CEZs), enclosed by Temporary Protective Fencing, as detailed below and to be agreed with the Local Planning Authority (LPA),

1. The installation of physical tree protection measures must be completed before commencement or works, including the creation of compounds, access by vehicles or plant, delivery of materials, ground investigations or works, or any other construction works
2. Be located as shown on the Arboricultural Method Statement plan.
3. Be installed as per the specification below or as agreed in writing with Local Planning Authority.
4. Be retained in place throughout the development process

5. Prohibited activities in the Construction Exclusion Zones (CEZs),

   - No access for machinery, plant or vehicles
   - No storage of spoil or materials
   - No excavation
   - No fires

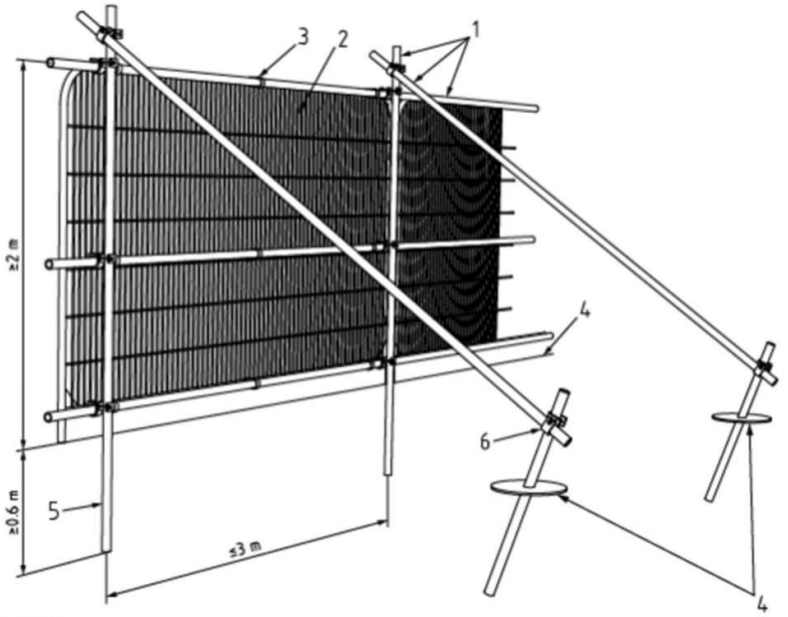

BS5837:2012 Figure 2: Default specification for protective barrier

Key
1. Scaffold poles
2. Heavy gauge 2m galvanised tube and weld mesh infill panels
3. Panels secured to uprights and cross- members with wire ties
4. Ground level
5. Up rights drive into the ground until secure (min depth .6m)
6. Standard scaffold clips



Recommended signage for fencing.

Appendix 5 - Professional Profile

Monica Gillespie

Bsc (Hons) Msc, MArborA, Cbiol, MRSB, Tech Cert (Arbor A)

Is a professional and committed arboriculturist with extensive experience managing public and privately owned trees. With a focus on providing no nonsense practical advice and helping clients to find sustainable solutions.

Industry experience

- Planning and BS5837 Surveys
- Tree inspections, survey and risk management
- Protected trees and legal issues
- Policy development
- High Hedge Regulations
- Pest and diseases including Ash dieback
- Tree planting and landscaping
- Woodland management
- Veteran trees.
- Tree related subsidence assessment
- Systems such as Ezy treev, CAVAT, VALID, VTA, Qtra and icanopy

Qualifications

- Masters in Ecology and Environmental Management (With distinction) (Msc)
- Honours Degree in Geography and Botany (BSc Hons)
- Technicians Certificate in Arboriculture (Tech Cert (Arbor A)
- Accredited LANTRA Professional Tree Inspector.
- Accredited VALID tree risk benefit Validator

Memberships and continuing professional development

- Professional Member Arboricultural Association (MArborA)
- Chartered Biologist and Member of Royal Society of Biology (Cbiol MRSB)

VALID
Tree Risk-Benefit Validator

Arboricultural ASSOCIATION
Professional Member

Appendix 6 - Report Limitations

A7.1 Liability The information collected in relation to the trees is adequate for the purposes of this report only. Peak Tree Consultancy Ltd shall not be liable for any use of this report other than for the purposes for which it was produced.

A7.2 Validity. Owing to the dynamic nature of arboricultural features, the assessment of tree condition and structural potential and the contents of this report are valid at the time for 12 months. Validity of the report assumes absence of inclement weather and no change in the trees existing context. If more than 12 months have elapsed since the date of this report, further advice must be taken before you rely on the contents of this report Reliance should not be given to comments made in respect of other disciplines i.e. landscape, ecology or civil engineering without first consulting an appropriate expert.

A7.3 Data collection. The comments made are based on observable factors present at the time of inspection. Observations were made from ground level and no climbing inspection was undertaken No invasive investigations or underground excavations were undertaken unless specifically stated. There may be hidden defects.

In some case the inspection of the base of the trees were restricted by ivy, debris, vegetation etc. Where access to a tree is not possible, best judgement/estimation will be used

The inspection and assessment was undertaken based on the documents provided

A7.4 Risk assessment. This assessment has been prepared in respect of the proposed development and should not be interpreted as a report on tree health and safety. Reasonable effort has been made to identify visible defects whilst undertaking the tree survey; trees are however, prone to natural failure without warning therefore no guarantee can be made as to the absolute safety of any of the trees surveyed. We only undertake detailed risk assessments when instructed in writing to do so.

A7.5 Potential damage to buildings An assessment of the potential influence of trees upon existing buildings or other structures resulting from the effects of trees upon shrinkable load-bearing soils or the effects of incremental root or branch growth, are specifically excluded from this report. This report is not intended for use in conjunction with the NHBC guidance for calculating foundation depths

A7.6 Alterations to site proposals Any alteration to the application site or development proposals could change the current circumstances and may invalidate this report and any recommendations made.

A7.7 Wildlife The Wildlife and Countryside Act 1981 (as amended) makes it an offence to disturb nesting birds or recklessly endanger a bat or its roost. Bats are also a European protected species and are additionally protected under the Conservation (Habitats & c) Regulations 1994 and 2010 (as amended). The survey findings, constraints, opportunities and design or mitigation recommendations included within that report must be read alongside any ecology or protect species reports.

A7.8 Tree works A lack of recommended work does not imply that a tree does not pose an unacceptable level of risk and likewise, it should not be implied that a tree will present an acceptable level of risk following the completion of any recommended work.

A7.9 Plans The diagrams and drawings provided by Peak Tree Consultancy Ltd are not exact and should not be used for design purposes unless directed otherwise. They are however indicative of site features.

Plans and Survey data

Tree Survey Schedule (TSS) Ref: PTC/2321/003.01/TSS

Tree Constraints Plan (TCP) Ref: PTC/2321/003.01/TCP

Tree Protection Proposals (TPP) Ref: PTC/2321/003.01/TPP

All plans can only be used for dealing with the tree issues and all scaled measurements must be checked against the original submission documents.

Tree Survey Schedule (TSS PTC/2321/003.1/TSS) – 26 Meadowfield Hadfield SK13 2BL

Tree No	Species	Age Class	Height (m)	Crown Spread (ave)	DBH (mm)	Dist. To Build	RPA (m2)	RPA radius	Comments	Recommendations	BS cat
T1	Weeping Willow	EM	12.5	10	330+420 Effective diameter 540	7.8	132	6.48	Early mature willow tree. The main stem divides in to 2 at around 1.3m above ground level. The tree has been topped in the past but has regrown significantly. The tree is to be maintained by period pruning.	To be retained. No works required for proposed extension.	B1,2
T2	Rowan	SM	7*	4*	200*	9	18.10	2.4	This tree has low vigour as it has been suppressed by neighbouring trees which has now been removed. Now that it is exposed it may recover in due course.	To be retained. No works required.	C 1, 2
T3	Spruce	Y	4*	3*	130	2.5*	7.65	1.56	This tree has a very high growth potential and is unsuitable for retention in its current location in close proximity to the property	To be removed irrespective of proposed extension.	U

*Estimated.

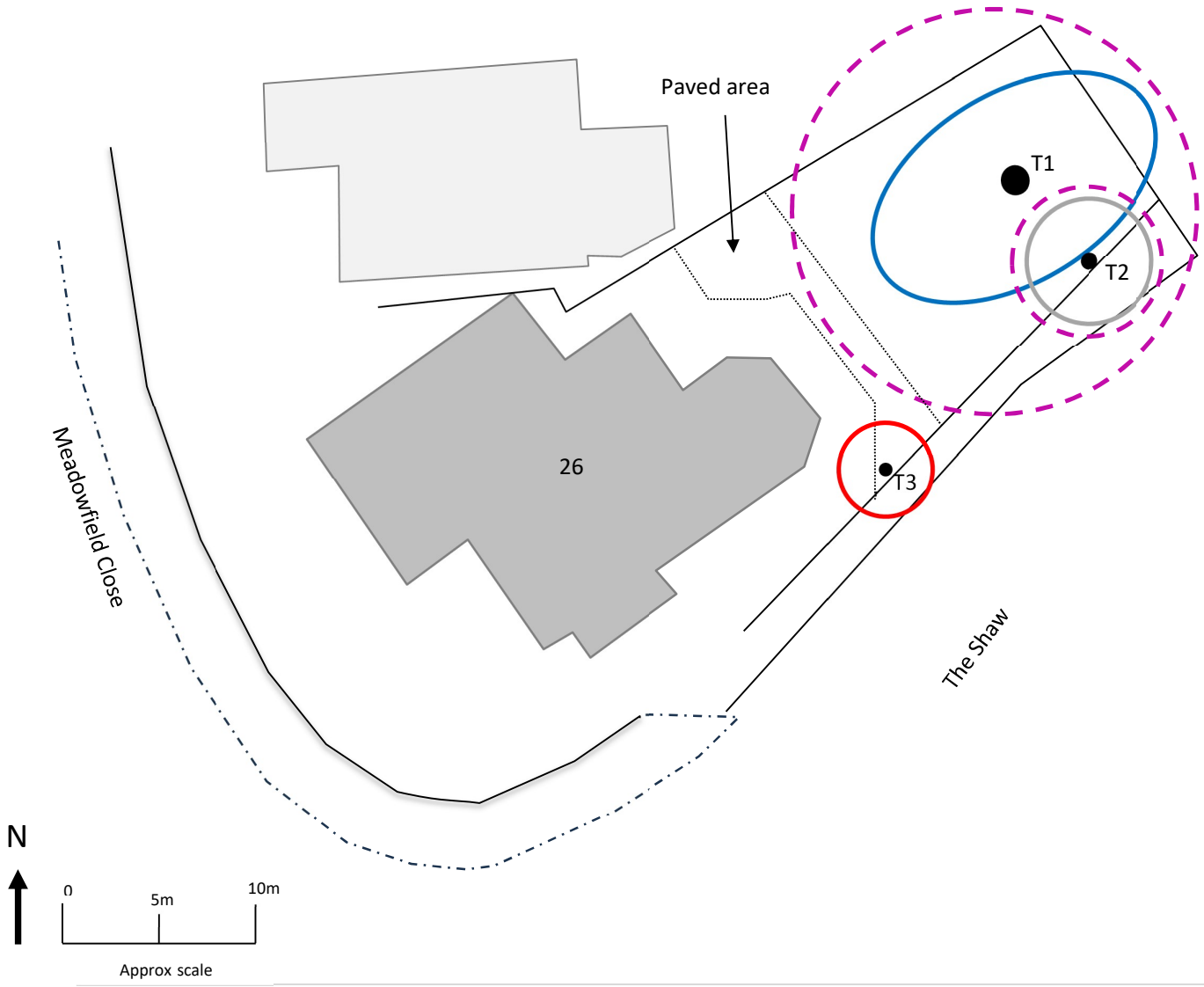

Arboricultural Survey at
26 Meadowfield Close
Hadfield
SK13 2BL

Tree Constraints Plan
Root protection Area

Ref: PTC/2321/003.01/TCP
Survey Date: 5/7/2023
Drawing Date: 6/7/2023

- Category **A**
- Category **B**
- Category **C**
- Category **U**
- Root Protection

Arboricultural Survey at
26 Meadowfield Close
Hadfield
SK13 2BL

Tree Protection Plan
Root protection Area

Ref: PTC/2321/003.01/TPP
Survey Date: 5/7/2023
Drawing Date: 6/7/2023



- Category A
- Category B
- Category C
- Category U
- Root Protection
- Construction Exclusion zone. (CEZ)
- Location of protective fencing.