GLOSSOP MARKET

200746

SCHEDULE OF LUMINAIRES

TYPE	DESCRIPTION	MANUFACTURER	CATALOGUE NO
B1	WLL 1 4K WHITE	FAGERHULT	64933-402
B2	VESPERE WALL – DECORATIVE LED LUMINAIRE	WHITECROFT LIGHTING	VWY34KW
C1	ESPRIT LED – DOWN LIGHT	WHITECROFT LIGHTING	ESLY14K
D1	COBBLER STANDARD	FAGERHULT	M105122
E1	FLORIN E3 – STAND ALONE RECESSED HIGH PERFORMANCE LED EMERGENCY LUMINAIRE	WHITECROFT LIGHTING	FLE31/EP
E2	FLORIN E3 – STAND ALONE RECESSED HIGH PERFOMANCE LED EMERGENCY LUMINAIRE	WHITECROFT LIGHTING	FLE32/EP
E3	FLORIN E3 – STAND ALONE SURFACE MOUNTED HIGH PERFORMANCE LED EMERGENCY LUMINAIRE	WHITECROFT LIGHTING	FLS31/EP
E3-TRACK	DIRECT D3 TRACK MOUNTED STAND-ALONE EMERGENCY UNIT	WHITECROFT LIGHTING	DD3BEP
E4	EX65 IP65 EMERGENCY BULKHEAD WITH PRISMATIC DIFFUSER	WHITECROFT LIGHTING	EX65M3/EP
EXIT	SURFACE MOUNTED ILLUMINATED EXIT SIGN	WHITECROFT LIGHTING	EESM30/EP
F1	COMPRISING OF:		
	ACCENT LED SPOTLIGHT WITH DIE-CAST ALUMINIUM BODY	WHITECROFT LIGHTING	UAY24KBM
TRACK 2M	DIRECT D3 EXTRUDED ALUMINIUM LIGHTING TRACK	WHITECROFT LIGHTING	DDX2MB
TRACK CNR CONN	DIRECT D3 90 DEGREE L CONNECTOR	WHITECROFT LIGHTING	DDLB
TRACK CONN	DIRECT D3 STRAIGHT CONNECTOR	WHITECROFT LIGHTING	DDJB
TRACK END CAP	DIRECT D3 END CAP	WHITECROFT LIGHTING	DDEB
TRACK END FEED	DIRECT D3 LIVE END POWER FEED	WHITECROFT LIGHTING	DDLIVEB
TRACK SUS KIT	DIRECT D3 CLUTCH SUSPENSION WITH 2m WIRE	WHITECROFT LIGHTING	DDSUSP2MB

TYPE	DESCRIPTION	MANUFACTURER	CATALOGUE NO
TRACK TOOL	DIRECT D3 CONDUCTOR CUTTING TOOL	WHITECROFT LIGHTING	DDCUTTOOL
F2	COMPRISING OF:		
	TOUCH MINI 940 LENS WIDE BEAM BLACK	FAGERHULT	84207-504
EMG	CONTROL TRACK THREE PHASE DALI ADAPTER BLACK	FAGERHULT	96648
3M	CONTROL TRACK 3000mm BLACK	FAGERHULT	82498
END FEED	CONTROL TRACK MAIN END FEED LEFT BLACK	FAGERHULT	82502
END FEED	CONTROL TRACK MAIN END FEED RIGHT BLACK	FAGERHAULT	82505
L COUPLER	CONTROL TRACK L-COUPLER LEFT BLACK	FAGERHULT	82511
T COUPLER	CONTROL TRACK T-COUPLER LEFT BLACK	FAGERHULT	82517
T COUPLER	CONTROL TRACK T-COUPLER RIGHT BLACK	FAGERHULT	82520
COUPLER	CONTROL TRACK STRAIGHT COUPLER BLACK	FAGERHULT	82526
WIRE KIT	CONTROL TRACK WIRE KIT 4m CLACK	FAGERHULT	97958
END CAP	CONTROL TRACK END CAP BLACK	FAGERHULT	82532
G1	STILETTO LED 2 – IP40 STEEL BODIED LUMINAIRE WITH CO-EXTRUDED, REEDED POLYCARBONATE DIFFUSER	WHIECROFT LIGHTING	STLEY34K
G2	AVENUE METRO – SUSPENDED LINEAR LED SYSTEM WITH INTEGRAL UPLIGHT	WHITECROFT LIGHTING	AOPPY224KW
G2E	AVENUE METRO – SUSPENDED LINEAR LED SYSTEM WITH INTEGRAL UPLIGHT EMERGENCY VERSION	WHITECROFT LIGHTING	AOPPY224KWEP
G3	AVENUE METRO – SUSPENDED LINEAR LED SYSTEM WITH INTEGRAL UPLIGHT	WHITECROFT LIGHTING	AOPPYB24KW
G3E	AVENUE METRO – SUSPENDED LINEAR LED SYSTEM WITH INTEGRAL UPLIGHT	WHITECROFT LIGHTING	AOPPYB24KWEP
G4	AVENUE METRO – SUSPENDED LINEAR LED SYSTEM WITH INTEGRAL UPLIGHT	WHITECROFT LIGHTING	AOPPYA24KW
G2-G4 CM KIT	AVENUE METRO – MOUNTING KIT	WHITECROFT LIGHTING	ADCMOKIT
G2-G4 END CAPS	AVENUE METRO – END CAP KIT	WHITECROFT LIGHTING	AOPENDCW
G2-G4 SUS KITS	AVENUE METRO – SUSPENSION KIT	WHITECROFT LIGHTING	AOSUSKIT

TYPE	DESCRIPTION	MANUFACTURER	CATALOGUE NO
H1	KOLO 400mm IP44 – CIRCULAR CAST ALUMINIUM BODY LED LUMINAIRE	WHITECROFT LIGHTING	K4Y4274KW
H1E	KOLO 400mm IP44 – CIRCULAR CAST ALUMINIUM BODY LED LUMINAIRE	WHITECROFT LIGHTING	K4Y4274KW-EP
H1/H1E ACC	WHITE COLOURED TRIM RING	WHITECROFT LIGHTING	KLTR400W
J1	MIRAGE LED SURFACE – SURFACE MOUNTED DOWNLIGHTER WITH CAST ALUMINIUM BODY AND SPECULAR REFLECTOR	WHITECROFT LIGHTING	MBSY24K20W
J1 ACC	SUSPENSION KIT	WHITECROFT LIGHTING	MBSUSKITWSM
K1	CERL-P 314.840 1/DALI WHITE	FAGERHULT	667398
K2A	ARDEN INDOOR PENDANT LUMINAIRE	ARDEN	ARD-90022
K2B	ARDEN INDOOR PENDANT LUMINAIRE	ARDEN	ARD-90032
K3	TEGAN 2 RECESSED 600mmx600mm LUMINAIRE WITH SLIM LINE BODY AND QUADRAPRISM OPTIC	WHITECROFT LIGHTING	TSPY24K
X1	OLV344 IP65 LED-24/48W/3K ANTHRACITE GREY	FAGERHULT	132-0560
X1 ACC	ANTHRACITE GREY	FAGERHULT	WE-EF/RAL7016
X1E	INTEGRAL EMERGENCY CONVERSION OF X1	FAGERHULT	WE-EF/EMR/I
X1E ACC	ANTHRACITE GREY	FAGERHULT	WE-EF/RAL7016
X1E ACC	INTEGRAL EMERGENCY CONVERSION	FAGERHULT	WE-EF/EMR/I

FAGERHULT

Printed from fagerhult.com 2023-04-24

Art.no. 64933-402

EAN 7320046733803

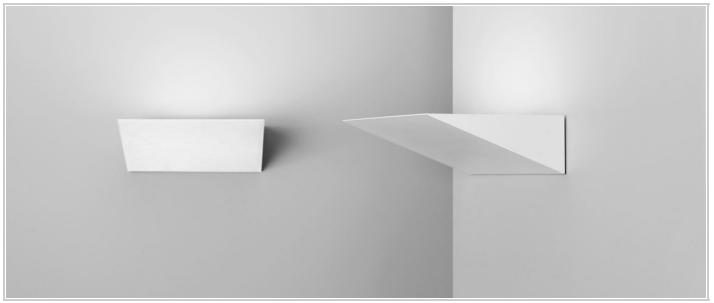

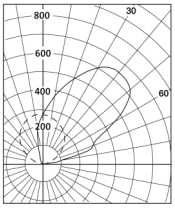

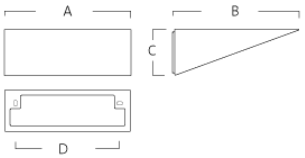

A	B	C	D
300	287	104	250

Wall 1 LED

DALI/Phase-pulse

DESIGN

Colour White

LIGHT DATA & PERFORMANCE

Lumen output 3884

CLO time, h 100000

CCT, K 4000

SDCM 3

LED driver, h/max failure % 100000/10

CLO function active Yes

lm/W 146

CRI 80

Lumen maintenance L100 B50, h 100000

Energy class, LED module C

CONTROLS & CONNECTIVITY

Light control DALI/Phase-pulse

No of Dali Addresses 1

Switch control, max no. 60

Driver brand Helvar

Power on last level Yes

AM Yes

ELECTRICITY & ENCLOSURE

Rated supply voltage, V 220-240

Protective class 1

Start W 27

Average W 30

Min. ambient temperature, °C -25

MCB B10A, pcs 22

MCB C10A 37

THD, % 20

Surge protection DM, kV/kA 1

Mains frequency, Hz 0, 50, 60

IP rating 20

End W 33

Stand by W 0.5

Max. ambient temperature, °C 25

MCB B16A 36

MCB C16A 61

Surge protection CM, kV/kA 4

Power factor, 100 % 0.95

DIMENSIONS

Length, mm 300

Height, mm 104

Width, mm 287

Weight, kg 2.4

Installation 2 securing holes.

Connection Snap-in terminal block 5x2.5 mm². 1-phase through-wiring possible with recessed cable.

Design Luminaire body in structured white (RAL 9016) or structured alu grey (RAL 9006) sheet metal. The light opening is covered by a clear plastic sheet.

Reflector Asymmetrical reflector made of metallised aluminium with excellent reflection characteristics (> 92 %).

Dimming CLO (Constant Light Output) and DALI/phase pulse control as standard.

Designed by Claesson Koivisto Rune.

Miscellaneous Central, surface mounted mains cable possible from above, no onward connector.
CLO (Constant Light Output) maintains the correct light from the luminaire for the duration of its rated life.

Vespere Wall

Wall mounted decorative luminaire for direct/indirect lighting





Silver 400mm



Silver 700mm



700mm

Optics

- 2149 to 3657 lumens (24 to 29W)
- 3000K and 4000K colour temperatures
- Ra>80
- Opal polycarbonate Tp(a) rated diffuser
- 50% up / 50% downlight

Body

- 2 body sizes - 400mm and 700mm long
- Integral emergency available in 700mm body only (for horizontal mounting):
  - Emergency output 271 lumens
  - 3 hour self-contained or 3 hour COMEPS DALI addressable emergency options
- Formed steel body with 1st fix back plate for easy installation
- White and silver paint finishes
  - White RAL 9016
  - Silver RAL 9006
- Fixed output driver as standard, DALI optional

©2021 Whitecroft Lighting | Contact number: +44 (0)161 330 6811

Order codes

400mm body

				B50
4000K White finish	Fixed Output	3hr Emergency	LL/CW	L80
2248 lumen, 24.4W	VWH14KW	N/A	92	50k

700mm body

				B50
4000k White finish	Fixed Output	3hr Emergency	LL/CW	L80
2930 lumen, 25.6W	VWH24KW	VWH24KWEM	114	50k
3657 lumen, 29.3W	VWH34KW	VWH34KWEM	124	50k

Options

Option	Code	Example
3000K	Change 4K to 3K	i.e. VWH13KW
Silver finish	Change end 'W' to 'S'	i.e. VWH14KS
DALI driver	Change 'H' to 'Y'	i.e. VWY14KW
COMEPS emergency	Change 'EM' to 'EP'	i.e VWH24KWEP
Integral emergency on 700mm body only		

LED Performance

Colour Temp	RA (CRI)	Life expectancy	Colour consistency
4000K	>80	50,000 hours	MacAdam 3 SDCM

Dimensions

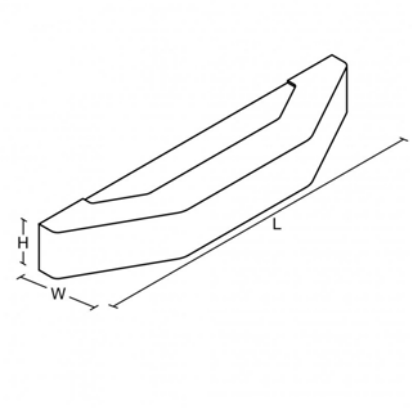

VERSION	L	W	H	KG	KG(EM)
400mm body	400	81	110	1.4	
700mm body	700	81	110	2.3	3

Photometric Performance

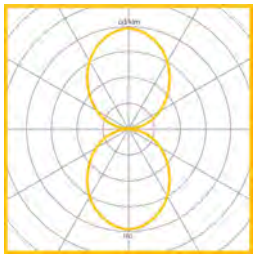

Direct/indirect
LOR = 100%



Emergency only
LOR = 100%

Performance Guide

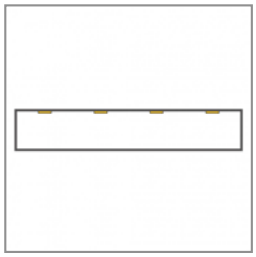

Lamps	3657 lumen, 4000K
Illuminance	200 lux
Spacing	3m
Maintenance	0.8
Reflectance	70/50/20%
Ceiling Height	2.7m
Working plane	0.0m
Mounting height	2.0m

To Specify

Decorative linear direct/indirect wall mounted luminaire with smooth chamfered front in white or silver and opal polycarbonate diffuser. 400mm and 700mm long body options with 700mm having no visible fixings from below. Simple 'first fix' backplate for easy wiring and installation. 50/50% up/down distribution ratio to softly illuminate walls whilst efficiently delivering light to the floor and ceiling - as Whitecroft VESPERE WALL

Esprit LED

Compact downlighter

IP44





Opal disc



Floating ring

Optics

- Output Options:
  - 1000 lumens (10.1W)
  - 2000 lumens (17.3W)
  - 3000 lumens (29W)
- Supplied complete with anodised specular reflector
- Two colour temperature options;
  - ‘Cool’ white 4000K
  - ‘Warm’ white 3000K
- Emergency output - 308 lumens (all variants)

Body

- IP44 as standard
- IP54 options available with disc attachment
- TP(a) options available with disc attachment
- Supplied complete with driver in fixed output or DALI
- Black cast aluminium heatsink with white polycarbonate body and bezel
- Optional attachments available for visual differentiation or wipe-clean surface (supplied separately);
  - IP54 clear or opal flat polycarbonate disc
  - TP(a) clear or opal flat polycarbonate disc
  - Architectural floating ring with clear sides and an opal underside
  - Anti-glare control insert for reduction of glare
- Rapid spring assembly installation
- For ceiling thicknesses of 1mm - 30mm
- RAL Colour: RAL9003
- Optional integral emergency options in 3hr or COMEPS (COMEPS can be wired as Easytest if required)
- Emergency variants are supplied with a NiCd battery
- Retrofit kit available for Esprit LED and Esprit LED emergency
  - Replace existing downlighters with a cut aperture between 172mm – 230mm
  - Retrofit kit consists of an attachment bezel and fixing springs
  - Esprit LED luminaire to be ordered separately
  - Colour: White RAL 9003

Order codes

4000K

			B50			
4000K	Fixed Output	3hr Emergency	LL/CW	L70	L80	L90
1071 lumens (10.1W)	ESLH14K	ESLH14KEM	106	>100k	>100k	74k
1940 lumens (17.3W)	ESLH24K	ESLH24KEM	112	>100k	77k	36k
2920 lumens (29W)	ESLH34K	ESLH34KEM	101	>100k	85k	39k

Accessories

Clear IP54 Disc Attachment	ESLA-IP54C
Opal IP54 Disc Attachment	ESLA-IP54
Clear TP(a) IP54 Disc Attachment	ESLAP-IP54C
Opal TP(a) IP54 Disc Attachment	ESLAP-IP54
Architectural floating ring	ESLA-3
Anti glare control insert	MLA-AGC
Esprit LED retrofit kit	ESREFIT

Options

3000K	Replace 4K with 3K
COMEPS*	Add suffix /EP
DALI	Replace H with Y

Note: All DALI variants require 1 DALI address per driver.
COMEPS variants will require an additional DALI address.

LED Performance

Colour Temp	RA (CRI)	Colour consistency
4000K	>80	MacAdam 3 SDCM

Dimensions

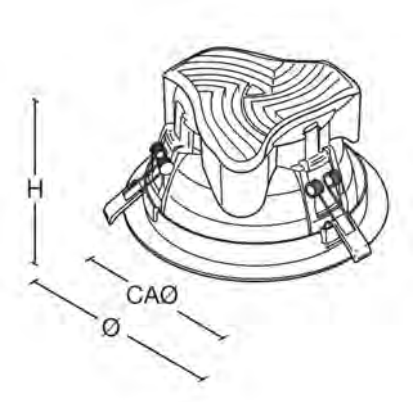

H	KG	KG(EM)	Ø	CAØ
99.1	1	2	192	165

Photometric Performance

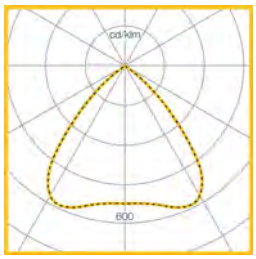

4000K 9W, 1100 Lumen
LOR = 100.0%
SHR MAX = 1.65

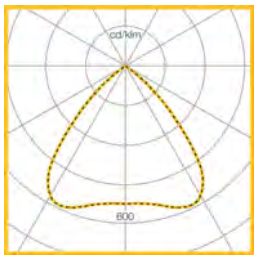

4000K 17.5W, 2000 Lumen
LOR = 100.0%
SHR MAX = 1.65

Performance Guide

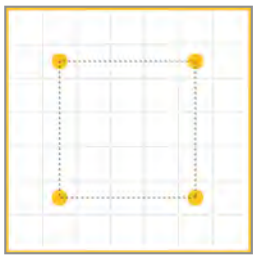

Lamps	4000K LED
Illuminance	203 lux
Spacing	3.0m x 3.0m
Maintenance	0.8
Reflectance	70/50/20
Ceiling Height	2.7m
Working plane	0.8m

To Specify

Recessed LED downlight with cast aluminium heatsink, white polycarbonate body and bezel, and integral 1100 / 2000 / 3000 lumen light engine and driver. 165mmØ cut aperture for ceiling thicknesses of 1-30mm. Rapid spring assembly installation – as Whitecroft Lighting ESPRIT LED

COBBLER Pendant

Design by Olle Lundberg



Specifications

Description
Pendant globe

Article number
M105022

Colour
Champagne

Secondary colour
Champagne

Size (mm)
Ø300xH243mm

Light output
400lm

CRI/CT
823

Power
7,9W

Socket
E27

Cord/connection
3m HF cable, ceiling cup, terminal block 2x2,5mm²

Distribution
Symmetrical

Control
Dimmable*

IP Rating
IP20

Life time
L70 25 000h

NCS/RAL
NCS S 3030-Y20R Fine texture

SDCM
3

Electrical Class
2

General information

Material

Shade in spin-formed aluminium. Pendant suspension in aluminium. Textile cable.

Installation

Pendant from cable, 3 m.

Connection

Feed cable 2x0.75 mm², length 3 m. Rose with terminal block 2x2.5 mm². Halogen-free cable.

Light source

Including CCFL in one of two models (Standard or Globe). Colour temperature 2300K. Colour rendering CRI > 80. Rated lifetime 25000h. Compatible with a variety of dimmers (see dimmer list). Recommended dimmer compatible with Schneider Electric Trend and Exxact frame available as accessory.

Other

Pendant suspension in black RAL9005, G10. Recommended dimmers: Schneider Electric Trend and Exxact frame available as accessory.

Energy classification

This product contains a light source with energy efficiency class G

Additional colours (fine texture)
Dusty purple, Grey, Salmon pink, Turquoise

Matt strukturlack på samtliga kulörer. Det tillkommer en mindre kostnad per order (oavsett antal armaturer).

Measurements

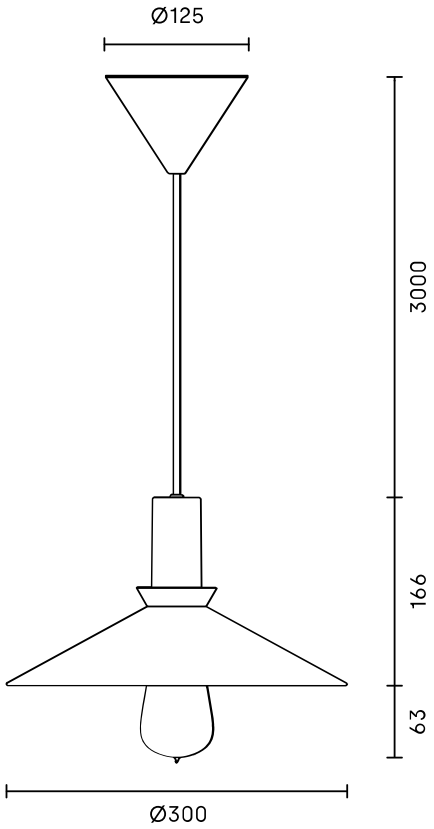

Florin E3

High performance emergency luminaire

IP40 IP44





Escape route



Surface

Optics

- Recessed: 1.5W LED delivering 150 lumens or
- Surface: 3W LED delivering 260 lumens
- Open area and escape route distribution patterns
- Polycarbonate Tp(a) rated optics
- COMEPS version can be used as self-test by not connecting the DALI pair
- Minimum life of 50,000 hours

Body

- White high performance LED emergency head and charge indicator with non-maintained driver, charger and battery
- 3 hour non-maintained
- Ambient temperature range:
  - 0°C to +40°C recessed
  - 0°C to +45°C surface
- Battery, recessed version - Nickel Cadmium NiCd
- Battery, surface version - Lithium Iron Phosphate LiFePO4
- Central Battery version is a slave luminaire and does not include a hold-off relay (to be supplied by others)
- RAL Colour: White RAL9016.

Recessed

- IP40 rated
- Dedicated codes for open area and escape route versions
- Battery housing ensures a neat cut aperture hole and effective installation through fixed ceilings
- Suitable for ceiling thickness of 10-25mm with a minimum ceiling void of 175mm
- Ceiling thickness less than 10mm may require a patress (not supplied)
- Stainless steel spring clips to secure lamp head in position
- Also available with "EW" Routefinder Wireless for addressable emergency testing without the need for a 2 core communication cable

Surface

- Supplied with two lenses for open area or escape route distribution
- COMEPS / Easy Test functionality as standard
- Uses Lithium Iron Phosphate (LiFePO4) batteries for stability, good performance and longer life
- LiFePO4 battery life in excess of 6 years if operated within temperature limits
- IP44 rated

Order codes

Recessed

		L70B50	L80B50	L90B50
Escape Route	FLE32	>100K	>100K	55K
Open Area Distribution	FLE31	>100K	>100K	55K

Note: All DALI variants require 1 DALI address per driver. COMEPS variants will require an additional DALI address.

Surface

		L70B50	L80B50	L90B50
Escape Route (&Open Area)	FLS31/EP	>100K	>100K	55K
Open Area (&Escape Route)	FLS31/EP	>100K	>100K	55K

Surface versions are COMEPS as standard

Note: All DALI variants require 1 DALI address per driver. COMEPS variants will require an additional DALI address.

Options

CENTRAL BATTERY *	Add suffix /CB	i.e FLE32/CB or FLS31/CB
COMEPS **	Add suffix /EP	i.e FLE32/EP
ROUTEFINDER WIRELESS	Add suffix /EW	i.e. FLE32/EW

/CB and /EP cannot be used together
* Central Battery version is a slave luminaire and does not include a hold-off relay
** COMEPS - when not connected to the DALI system will operate as Easytest

Note: All DALI variants require 1 DALI address per driver. COMEPS variants will require an additional DALI address.

Dimensions

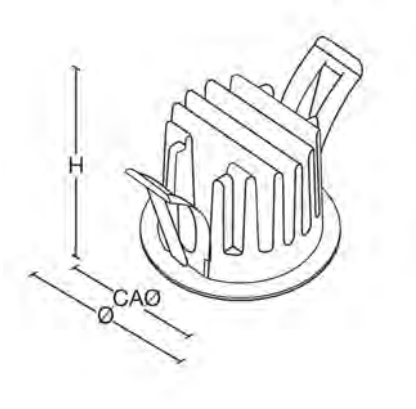

VERSION	H	KG(EM)	Ø	CAØ
Recessed Florin E3 head	25	0.31 (0.46 COMEPS)	55	45

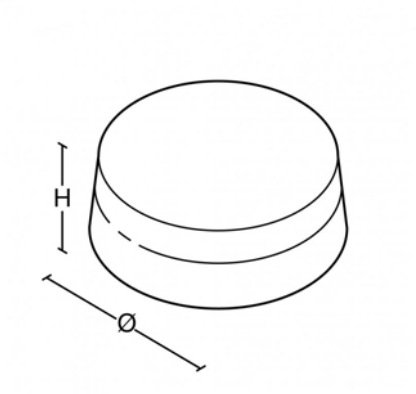

VERSION	H	KG(EM)	Ø
Surface Florin E3 head	43	0.24	142

Performance Guide

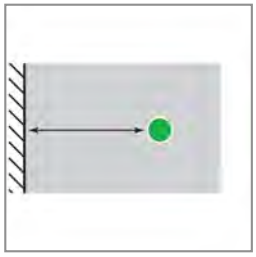

Open Area - Mounting Height	From Wall
2.5m	5.0m
3.0m	5.4m
3.5m	5.4m
Escape Route - Mounting Height	From Wall
2.5m	6.1m
3.0m	6.5m
3.5m	6.6m

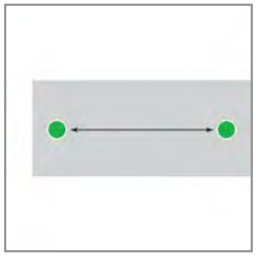

Open Area - Mounting Heights	Between Heads
2.5m	12.0m
3.0m	13.6m
3.5m	14.8m
Escape Route - Mounting Heights	Between Heads
2.5m	15.0m
3.0m	16.3m
3.5m	17.4m

To Specify

Stand alone recessed or surface mounted white high performance LED emergency luminaire, complete with charge indicator, driver, charger and battery, capable of operation in non maintained mode. Alternative version for Central Battery. Driver to ensure constant light output independent of battery voltage for 3 hours from mains failure - as Whitecroft Lighting FLORIN E3

Direct D3

3 circuit mains voltage track with DALI conductors for feature and display lighting

IP20





Direct D3 Accessories



Direct D3 Track, White



Direct D3 Suspension Kit



Direct D3 Emergency

Body

- IP20
- Extruded aluminium
- White RAL 9010 or black RAL 9005 finish
- Compatible with ‘Accent’ LED spotlight range
- Suitable for Global Trac Pro 3 circuit adapter
- Surface mounted or suspended
- 1m or 2m lengths
- Maximum distance between suspensions 900mm for up to 25kg load. (ie. 2 per 1m track and 3 per 2m track)
- Maximum 16A rating
- Earth conductor offset to one side to ensure correct alignment of components
- Range of accessories to produce a flexible arrangement
- Dedicated tool available to ensure neat on-site cutting
- Stand-alone emergency luminaires available
- Emergency luminaires supplied with both open area and escape route lens, 190 lumens

©2022 Whitecroft Lighting | Contact number: +44 (0)161 330 6811

Order codes

Direct D3

Version	White finish	Black finish
1m long 3 circuit & Dali track	DDX1MW	DDX1MB
2m long 3 circuit & Dali track	DDX2MW	DDX2MB
End power feed	DDLIVEW	DDLIVEB
Fixed ‘L’ corner, inner earth	DDLW	DDLB
Fixed 'L' corner, outer earth	DDLEW	DDLEB
Flexible corner connector	DDADJW	DDADJB
Straight in-line connector	DDJW	DDJB
End cap, unpowered	DDEW	DDEB
2m suspension kit (includes ceiling mount)	DDSUSP2MW	DDSUSP2MB
Stand-alone 3 hour emergency luminaire, COMEPS Dali test	DD3WEP	DD3BEP

Accessories

Option	Order Code
Conductor cutting tool for on-site cutting	DDCUTTOOL

Dimensions

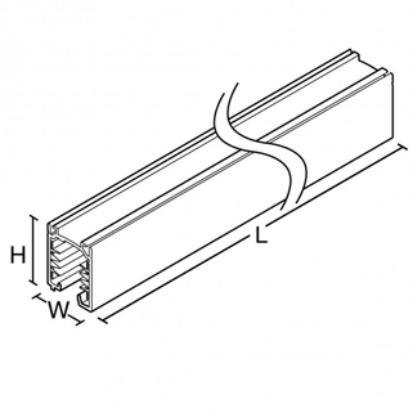

VERSION	L	L2	W	W1	H	H1	KG	KG(EM)	Ø
1m track	1000	-	31.4	-	37.8	-	1.1	-	-
2m track	2000	-	31.4	-	37.8	-	2.2	-	-
End feed	148	95	31.4	-	37.8	-	0.1	-	-
Fixed corner	142	89	31.4	-	37.8	-	0.2	-	-
Flexible corner	210	89	31.4	-	37.8	-	0.2	-	-
Em luminaire	415	-	58	-	50.4	-	-	1.2	-

Emergency Spacings

Lamps	Open Area Lens
Illuminance	0.5 lux min
Spacing	8.8m
Maintenance	0.8
Ceiling Height	2.5m

Lamps	Escape Route Lens
Illuminance	1 lux min
Spacing	11m
Maintenance	0.8
Ceiling Height	2.5m

To Specify

Extruded aluminium lighting track 1m or 2m length with 3 mains circuits and integrated DALI control circuit. Suitable for Accent LED spotlights with Global Pro adapters. – as Whitecroft Lighting DIRECT D3.

Concert EX65

Surface mounted IP65 emergency bulkhead





Concert EX65 & Legend

Optics

- Power consumption;
  - 3.2W maintained
  - 1.2W non maintained
- Clear polycarbonate TP(a) fresnal lens with linear prisms
- Wide light distribution
- 16 long life LEDs
- 151 lumen output
- Self adhesive legend kit available for adhesion to to bulkhead (supplied separately)
- Legends supplied in accordance with BS 5266-1 (ISO7010)
- Legends have a viewing distance of up to 32m

Body

- IP65/IK10 rated
- High impact polycarbonate TP(a) body finished white
- Surface mounted
- 3 hour maintained as standard (may be wired as non maintained)
- Also available with "EW" Routefinder Wireless for addressable emergency testing without the need for a 2 core communication cable
- High temperature Ni-Cd battery with constant current charger and LED charge indicator
- Hinged gear tray for easy maintenance
- Cable entry options along the sides and back of the body
- Suitable for operation in low temperature environments

©2023 Whitecroft Lighting | Contact number: +44 (0)161 330 6811

Order codes

Concert EX65

Concert	3hr Emergency	COMEPS*	Routefinder Wireless
IP65 LED Emergency bulkhead	EX65M3	EX65M3/EP	EX65M3/EW

* COMEPS will work as self test if DALI pair not connected

Accessories

Self Adhesive Legend Kit	EX65LK/7010

Dimensions

L	W	H	KG(EM)
350	120	90	1.2

To Specify

Surface IP65 Emergency LED bulkhead complete with polycarbonate TP(a) fresnal lens. 3hr maintained or non maintained - as Whitecroft Lighting CONCERT EX65.

Egress Exit

Versatile range of ceiling mounted surface, suspended or recessed exit signs

IP40





Egress Exit Suspended



Egress Exit Recessed

Optics

- Power consumption in operation: 3.2W maintained, 0.8W non-maintained
- 30 metre viewing distance
- 14 long life white LEDS
- Supplied with complete set of EC and ISO format Legend Panels (right/left/down/up)
- ISO format legends supplied in accordance with BS 5266-1 2011 (ISO7010)
- Can be used as double sided for left/right direction

Body

- IP40 rated
- Polycarbonate body finished in white
- Ceiling or wall mounted surface, suspended or recessed.
- Both surface and suspended option can be recessed using the optional recessing frame.
- Suspension wires can be easily adjusted from 15mm up to 1000mm in length
- 3 hour maintained or COMEPS addressable DALI test
- Can be wired as non-maintained
- Supplied with long life Lithium LiFePO4 batteries:
  - Standard 6.4V 600 mAh
  - COMEPS / DALI 3.2V 3.2Ah
- Suitable for ambient temperatures 0 to 45ºC
- Also available with "EW" Routefinder Wireless for addressable emergency testing without the need for a 2 core communication cable

©2023 Whitecroft Lighting | Contact number: +44 (0)161 330 6811

Order codes

Egress Exit

Description	3hr Emergency	COMEPS *	Routefinder Wireless
3.2W, Wall/ceiling mounted	EESM30	EESM30/EP	EESM30/EW
3.2W, Suspended	EEPM30	EEPM30/EP	EEPM30/EW
* COMEPS version can operate as self test when not connected to a DALI system			

Accessories

Description	Order Code
Recessing frame	EEM30R

Dimensions

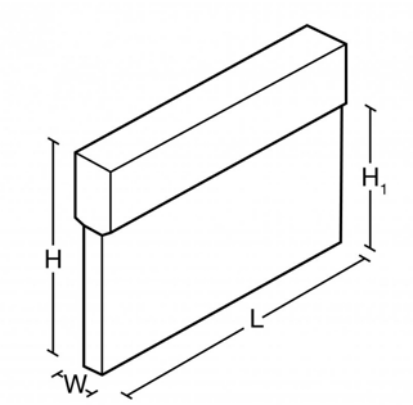

VERSION	L	W	H	H1	KG(EM)	Cut Aperture
Exit Sign	330	45	250	195	2.5	
Recessing Frame	388	80	60		0.5	372x55

To Specify

Self-contained LED maintained emergency sign luminaire with rigid body and an easy to install full set of legends. Ceiling mounted surface, suspended or recessed with LiFePO4 battery, energy efficient charger and LED charge indicator – as Whitecroft Lighting EGRESS EXIT.

Direct D3

3 circuit mains voltage track with DALI conductors for feature and display lighting

IP20





Direct D3 Accessories



Direct D3 Track, White



Direct D3 Suspension Kit



Direct D3 Emergency

Body

- IP20
- Extruded aluminium
- White RAL 9010 or black RAL 9005 finish
- Compatible with ‘Accent’ LED spotlight range
- Suitable for Global Trac Pro 3 circuit adapter
- Surface mounted or suspended
- 1m or 2m lengths
- Maximum distance between suspensions 900mm for up to 25kg load. (ie. 2 per 1m track and 3 per 2m track)
- Maximum 16A rating
- Earth conductor offset to one side to ensure correct alignment of components
- Range of accessories to produce a flexible arrangement
- Dedicated tool available to ensure neat on-site cutting
- Stand-alone emergency luminaires available
- Emergency luminaires supplied with both open area and escape route lens, 190 lumens

Order codes

Direct D3

Version	White finish	Black finish
1m long 3 circuit & Dali track	DDX1MW	DDX1MB
2m long 3 circuit & Dali track	DDX2MW	DDX2MB
End power feed	DDLIVEW	DDLIVEB
Fixed ‘L’ corner, inner earth	DDLW	DDLB
Fixed 'L' corner, outer earth	DDLEW	DDLEB
Flexible corner connector	DDADJW	DDADJB
Straight in-line connector	DDJW	DDJB
End cap, unpowered	DDEW	DDEB
2m suspension kit (includes ceiling mount)	DDSUSP2MW	DDSUSP2MB
Stand-alone 3 hour emergency luminaire, COMEPS Dali test	DD3WEP	DD3BEP

Accessories

Option	Order Code
Conductor cutting tool for on-site cutting	DDCUTTOOL

Dimensions

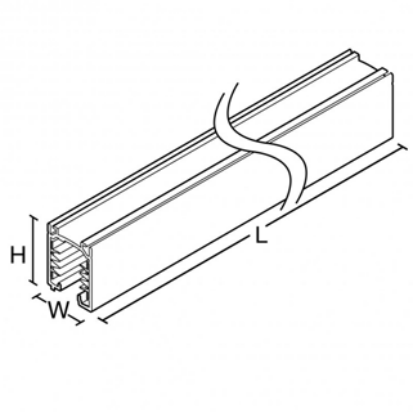

VERSION	L	L2	W	W1	H	H1	KG	KG(EM)	Ø
1m track	1000	-	31.4	-	37.8	-	1.1	-	-
2m track	2000	-	31.4	-	37.8	-	2.2	-	-
End feed	148	95	31.4	-	37.8	-	0.1	-	-
Fixed corner	142	89	31.4	-	37.8	-	0.2	-	-
Flexible corner	210	89	31.4	-	37.8	-	0.2	-	-
Em luminaire	415	-	58	-	50.4	-	-	1.2	-

Emergency Spacings

Lamps	Open Area Lens
Illuminance	0.5 lux min
Spacing	8.8m
Maintenance	0.8
Ceiling Height	2.5m

Lamps	Escape Route Lens
Illuminance	1 lux min
Spacing	11m
Maintenance	0.8
Ceiling Height	2.5m

To Specify

Extruded aluminium lighting track 1m or 2m length with 3 mains circuits and integrated DALI control circuit. Suitable for Accent LED spotlights with Global Pro adapters. – as Whitecroft Lighting DIRECT D3.

Accent

Track mounted adjustable LED spotlight for accent lighting

IP20





Direct D3 Surface Mount



Accent, black



Accent on Surface Adapter

Optics

- Nominal 1000 and 2000 lumens (10W and 20W)
- 3000K and 4000K colour temperatures
- Ra >80
- Narrow, medium and wide optics (20º, 26º and 36º beam angles)
- 60,000 hours to L70B10

Body

- For use with Whitecroft Direct D3 track (3 circuit and Dali dimming)
- Adapter is compatible with:
  - Global Pro Trac - non DALI
  - Global Pro Pulse - DALI
- IP20
- Extruded aluminium body
- White RAL 9010 or black RAL 9005 finish
- Fixed output and DALI dimming options
- Electrical Class 1
- >0.9 power factor
- Suitable for ambient temperatures -25 to +25°C
- Stand-alone emergency available (see Direct D3 Track web page)
- Surface mounting adapter for use without track

Order codes

4000K

Version	Fixed Output, white	Fixed Output, black	LL/CW	L70
1113 lumen, 10.1W, narrow, 4000K	UAH14KWN	UAH14KBN	110.2	60k
1171 lumen, 10.1W, medium, 4000K	UAH14KWM	UAH14KBM	115.9	60k
1054 lumen, 10.1W, wide, 4000K	UAH14KWW	UAH14KBW	104.4	60k
1981 lumen, 20.6W, narrow, 4000K	UAH24KWN	UAH24KBN	96.2	60k
2086 lumen, 20.6W, medium, 4000K	UAH24KWM	UAH24KBM	101.3	60k
1877 lumen, 20.6W, wide, 4000K	UAH24KWW	UAH24KBW	91.1	60k

Options

Version	Fixed Output, white	Fixed Output, black	LL/CW	L70
1053 lumen, 10.1W, narrow, 3000K	UAH13KWN	UAH13KBN	104.3	60k
1109 lumen, 10.1W, medium, 3000K	UAH13KWM	UAH13KBM	109.8	60k
998 lumen, 10.1W, wide, 3000K	UAH13KWW	UAH13KBW	98.8	60k
1879 lumen, 20.6W, narrow, 3000K	UAH23KWN	UAH23KBN	91.2	60k
1978 lumen, 20.6W, medium, 3000K	UAH23KWM	UAH23KBM	96	60k
1780 lumen, 20.6W, wide, 3000K	UAH23KWW	UAH23KBW	86.4	60k

Options

Title	Code	
DALI dimming	Change ‘H’ to ‘Y’	i.e. UAY14KWN

Accessories/Attachments

Title	Code
Surface adapter, white	DDCLGW
Surface adapter, black	DDCLGB
For compatible 3 circuit and Dali track, see ‘Direct D3’	

LED Performance

Colour Temp	RA (CRI)	Colour consistency
3000K / 4000K	80	MacAdam 3 SDCM

Dimensions

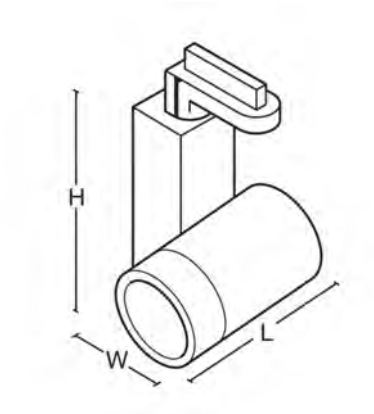

VERSION	L	W	H	KG
1000 lumen	122	130	145	0.9
1750 lumen	122	130	145	0.9

Photometric Performance

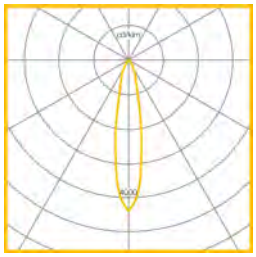

4000K 1683 lm
22W Narrow
LOR = 100%

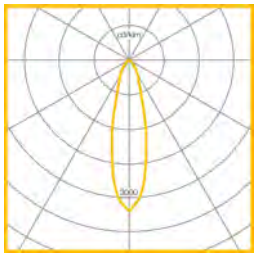

4000K 1965 lm
22W Medium
LOR = 100%

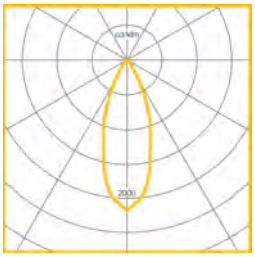

4000K 1595 lm
22W Wide
LOR = 100%

To Specify

Track mounted LED spotlight with integrated driver, fixed output or DALI dimming. Extruded aluminium body with choice of narrow, medium or wide distribution with fully adjustable swivel and tilt - as Whitecroft Lighting ACCENT.

Application images



FAGERHULT

Printed from fagerhult.com 2023-04-25

Art.no. 82498





Control Track

DALI

DESIGN

Colour Black

RAL 9005

CONTROLS & CONNECTIVITY

Light control DALI

DIMENSIONS

Length, mm 3000

Control Track is a controllable 3-phase track. It is easy to install and compatible with all luminaires with a Euro standard plus adaptor. The track is available in surface mounted and recessed versions. Control Track gives a smooth a clean impression in the ceiling.

Installation Control Track can either be surface mounted, wire pendant or recessed into the celling.

Connection Control Track is a 6 circuit track with, 3 phases, 2 control wires, 1 neutral wire and with a protective earth, designed for 230V, 3x16A current max 3,68 kVA. It supports DALI on the 2 integrated control wires.

Design The rail is in extruded aluminium and the accessories are in plastic, it comes in three different colours.

Anodized aluminium with grey accessories, black (RAL 9005) and white (RAL 9010). Recessed version is in our standard offer only available in white.

Dimming DALI as standard.

FAGERHULT

Printed from fagerhult.com 2023-04-25

Art.no. 82526



Control Track straight coupler

Control Track straight coupler / Black.

DESIGN

Colour Black

DALI 3-CIRCUIT ADAPTER

PRO-D680



COLOURS

OPTIONS

Dimmable

DALI

Product code White (RAL 9010)	PRO-D680-W
EAN code White	8719747931349
Product code Grey (RAL 7040)	PRO-D680-S
EAN code Grey	8719747931356
Product code Black (RAL 9011)	PRO-D680-B
EAN code Black	8719747931363
Main materials	PC UL94V0 + Copper
Net weight per piece	62 g
Inner box / outer box	1 / 150 pcs
Max pull streng	100N
Rated voltage per circuit	230V / 10A

DIMENSIONS

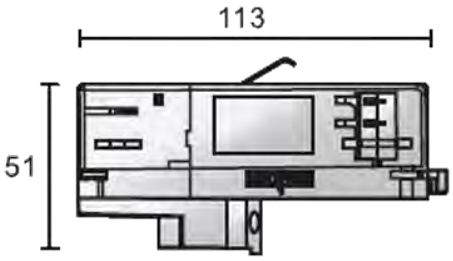

Including strain relief, excluding nipple

For DALI-control system

ON THE RIGHT **TRACK**

RoHS

LISTED

IP20

FAGERHULT

Printed from fagerhult.com 2023-04-27

Art.no. 82532

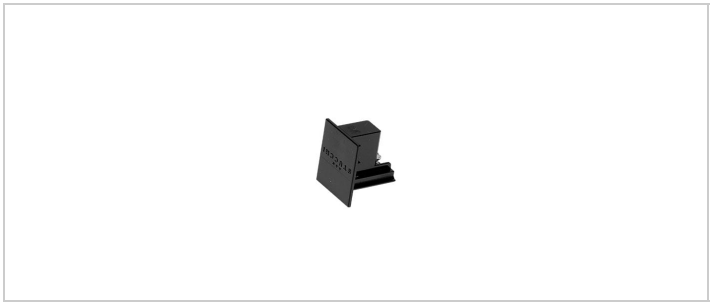

Control Track end cap

Control Track end cap / Black.

DESIGN

Colour Black

FAGERHULT

Printed from fagerhult.com 2023-04-25

Art.no. 82502



Control Track, main end feed

Control Track main end feed left / Black.

DESIGN

Colour Black

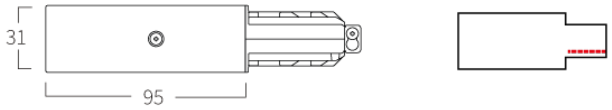

Floor view

FAGERHULT

Printed from fagerhult.com 2023-04-25

Art.no. 82505



Control Track, main end feed

Control Track main end feed right / Black.

DESIGN

Colour Black





Floor view

FAGERHULT

Printed from fagerhult.com 2023-04-25

Art.no. 82511



Control Track L-coupler

Control Track L-coupler left / Black.

DESIGN

Colour Black



Floor view

FAGERHULT

Printed from fagerhult.com 2023-04-25

Art.no. 82517



Control Track T-coupler

Control Track T-coupler left / Black.

DESIGN

Colour Black

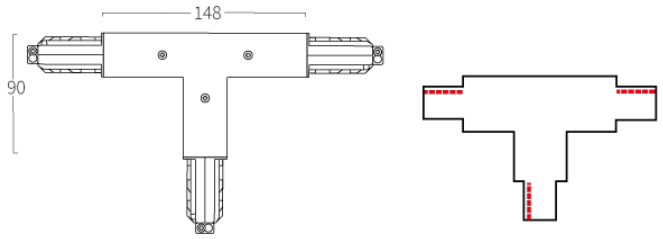

Floor view

Printed from fagerhult.com 2023-04-25

Art.no. 82520



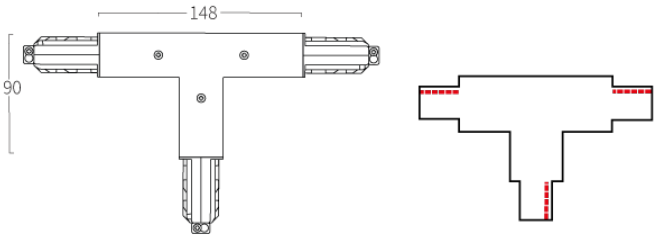

Floor view

Control Track T-coupler

Control Track T-coupler right / Black.

DESIGN

Colour Black

FAGERHULT

Printed from fagerhult.com 2023-04-25

Art.no. 97958



Control Track wire bracket including 4 m wire

Control Track wire bracket including 4 m wire, black. 10 pieces.

FAGERHULT

Printed from fagerhult.com 2023-04-25

Art.no. 84207-504

EAN 7320049364028



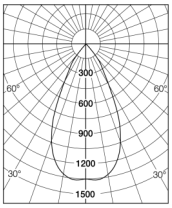

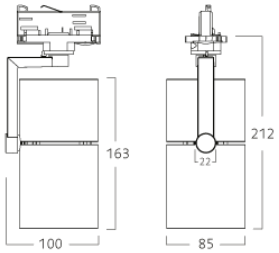

Touch Mini

Wide Beam, ControlTrack, DALI/Phase-pulse, Lens

DESIGN

Installation ControlTrack	**Light distribution** Wide Beam
Beam angle, ° 52	**Tilt, °** 90
Turn, ° 360	**Colour** Black

LIGHT DATA & PERFORMANCE

Lumen output 1234	**lm/W** 61
CCT, K 4000	**CRI** 90
SDCM 3	**Lumen maintenance 35 000 h** L96
Lumen maintenance 50 000 h L95	**Lumen maintenance 75 000 h** L93
Lumen maintenance 100 000 h L92	**Lumen maintenance L90 B50, h** 100000
LED driver, h/max failure % 50000/10	**Energy class, LED module** E

CONTROLS & CONNECTIVITY

Light control DALI/Phase-pulse	**Driver brand** Philips
No of Dali Addresses 1	**Power on last level** Yes
Corridor function Yes	**Switch control, max no.** 30
AM Yes	

ELECTRICITY & ENCLOSURE

Rated supply voltage, V 220-240	**Mains frequency, Hz** 0, 50, 60
Protective class 2	**IP rating** 20
System Wattage 18	**Stand by W** 0.45
Min. ambient temperature, °C -25	**Max. ambient temperature, °C** 25
MCB B10A, pcs 21	**MCB B16A** 34
MCB C10A 35	**MCB C16A** 59
THD, % 12	**Surge protection CM, kV/kA** 2
Surge protection DM, kV/kA 1	**Power factor, 100 %** 0.95

DIMENSIONS

Length, mm 85	**Width, mm** 100
Height, mm 248	**Weight, kg** 0.7

Touch is a stylish and timeless luminaire that will fit smoothly into any retail environment. Touch Mini is a small, neat and discreet spotlight with an integrated driver perfect for illuminating areas where there is a lower ceiling height such as 2,5-3m.

Installation Track mounted 3-phase track, Control Track or iTrack.

Design Housing in powder coated aluminium, white (RAL 9016), black (RAL 9017). Integrated driver.

Miscellaneous 930 LED is Below Black Body Locus (BBBL), other colour temperature on Black Body Locus.

Stiletto LED

IP40 diffuser luminaire



Optics

- Lumen output options:
  - 2100 lumens (16W)
  - 2800 lumens (22W)
  - 3600 lumens (28W)
  - 4200 lumens (29W)
  - 5300 lumens (39W)
  - 7200 lumens (52W)
- Emergency Output (BLF):
  - All variants - 450 Lumens
- Co-extruded reeded polycarbonate diffuser with translucent centre section and precision linear prisms to minimise glare from all viewing angles
- Available with 3000K and 4000K LED

©2023 Whitecroft Lighting | Contact number: +44 (0)161 330 6811

Body

- Steel body finished white
- IP40 construction when fully assembled
- BESA fixings to the rear
- Screw retained polycarbonate end caps
- Diffuser retained along full body length by rolled body profile
- Integral emergency options:
  - 3 hour self contained
  - COMEPS DALI addressable
  - Also available with "EW" Routefinder Wireless for addressable emergency testing without the need for a 2 core communication cable
- Emergency variants supplied with a NiCd battery

Order codes

Stiletto

			B50			
Stiletto (4000K)	Fixed Output	3hr Emergency	LL/CW	L70	L80	L90
2100 lumen (16W)	STLEH14K	STLEH14KEM	131	>100k	>100k	76k
2800 lumen (22W)	STLEH24K	STLEH24KEM	131	>100k	>100k	64k
3600 lumen (28W)	STLEH34K	STLEH34KEM	129	>100k	>100k	53k
4200 lumen (29W)	STLEH44K	STLEH44KEM	143	>100k	>100k	65k
5300 lumen (39W)	STLEH54K	STLEH54KEM	139	>100k	>100k	55k
7200 lumen (52W)	STLEH64K	STLEH64KEM	139	>100k	99k	45k

Options

COMEPS	Add suffix /EP	i.e STLEH14K/EP
DALI DIMMING	Replace H with Y	i.e STLEY14K
For 3000K colour temperature, please contact Whitecroft		

LED Performance

Colour Temp	RA (CRI)	Colour consistency
4000K	>80	MacAdam 3 SDCM

Dimensions

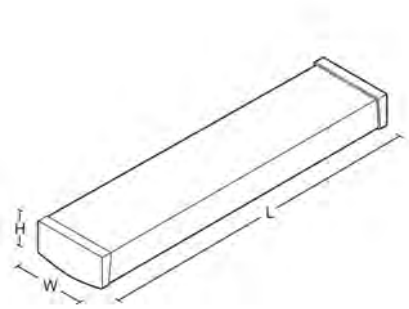

VERSION	L	W	H	KG	KG(EM)	FC
All	1207	145	72.5	5	6	610

Photometric Performance

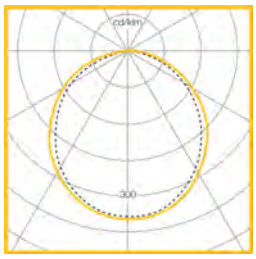

28W LED 4000K
3600 Lumens
LOR = 100.0%
SHR MAX = 1.59

Performance Guide

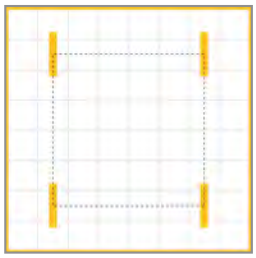

Lamps	39W LED
Illuminance	500 lux
Spacing	3.0m x 3.0m
Maintenance	0.8
Reflectance	70/50/20
Ceiling Height	2.7m
Working plane	0.8m

To Specify

Surface mounted IP40, steel bodied, LED luminaire with polycarbonate diffuser, reeded sides and diffuser base, retained along full length by rolled body profile - as Whitecroft Lighting STILETTO LED

Avenue Metro Suspended

Modular linear LED system with integral uplight for suspension mounting







Suspended, Hexaprism, Corner, Silver



Suspended, Pod, Organic Response, Black



Suspended, Opal, White



Suspended, Hexaprism, Silver

Overview

Avenue Metro takes design and technology to new heights. The slim body creates a sense of space and drama, whilst continuous lines of light trace the contours of the building, complementing every interior design. Revolutionary optics use clustered LED arrays to deliver higher light output with low glare, reducing the number of installed points and adding to the minimalist design that Avenue Metro promotes.

Optics

- Choice of optics:
  - Opal diffuser for general, circulation and feature areas
  - Hexaprism diffuser and Pod optic for visual comfort in office environments and glare control in EN12464-1 and LG7 compliant schemes
- All diffusers are TP(a) rated polycarbonate material
- White pods for white or silver body luminaire
- Black pods for black body luminaire
- Integral uplight as standard with 80% downlight, 20% uplight ratio
- 4000K ‘cool’ or 3000K ‘warm’ white LEDs
- Ra80 standard, Ra90 available on request
- E-light LED as standard with Pod for increased luminous efficacy and reduced through life costs
- Low, medium or high outputs available
- Outputs should not be mixed in any continuous run

- Typical lumens per metre as follows:
  - Pod (white) - Low Output - 1527 lumens
  - Pod (white) - Medium Output - 2484 lumens
  - Pod (black) - Low Output - 1068 lumens
  - Pod (black) - Medium Output - 1672 lumens
  - Hexaprism - Low Output - 1512 lumens
  - Hexaprism - Medium output - 2120 lumens
  - Opal - Low Output - 1581 lumens
  - Opal - High Output - 3645 lumens

- Emergency Output:
  - Opal - 360 Lumens
  - Hexaprism - 270 Lumens
  - Pod - 300 Lumens

Body

- IP20, IK07 rated protection
- Modular options for clean continuous lines of light with or without infills or for use as a stand-alone luminaire
- Extruded aluminium body with die cast end caps
- Choice of integral emergency options; 3 hour and addressable COMEPS
- Also available with 'EW' Routefinder Wireless for addressable emergency testing without the need for a 2 core communication cable
- Emergency variants are supplied with a NiCd battery
- Body colour options include silver (RAL 9006), white (RAL 9003) or black (RAL 9005), please note black pods for black body luminaire
- Through wiring as standard for simple electrical connection
- Cam joining mechanism delivers seamless join with no light loss
- Body lengths up to 3m, a 1.25m body allows any length over 2m to be achieved in 0.25m increments
- Corner units for creating signature shapes*
- Optional integral Organic Response® wireless sensor that communicates with its neighbouring luminaires, automatically controlling light across the area†
- Suspension mounting kits (1.5m drop) supplied separately
- End caps and continuous joining kits supplied separately
- End caps supplied and fitted on standalone versions
- For suspended without uplight, see Avenue Metro Surface
- Recessed and surface options also available

* Corner units for the Pod optic system are blank infills and not illuminated
† Every luminaire within an area that's to be controlled must have an integral Organic Response® detector. Wall switch and dongle are also available (supplied separately)
Note: All DALI variants require 1 DALI address per driver. COMEPS addressable emergency variants will require an additional DALI address.
Accessories

- White End Cap Kit (Pair*) AOPENDCW **
- Continuous Mounting Kit AOCMOKIT ***
- Suspension Kit AOSUSKIT *****
- 1000mm Infill White AOP1000INFW **
- 1250mm Infill White AOP1250INFW **
- 1500mm Infill White AOP1500INFW **
- 2000mm Infill White AOP2000INFW **
- (** Change 'W' to 'S' for silver or 'B' for black)

* End caps required at the end of each continuous run
*** One continuous mounting kit per join
***** One suspension kit per luminaire and infill length (standalone and continuous)

LED Performance

Colour Temp	RA (CRI)	Colour consistency
3000K / 4000K	>80	MacAdam 3 SDCM

Dimensions

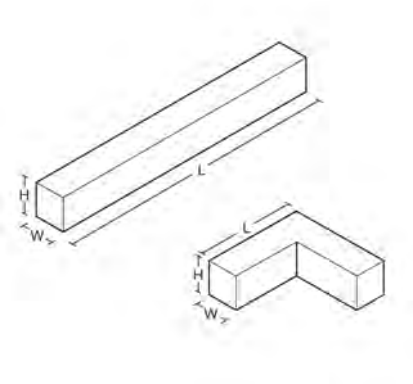

VERSION	L	W	H	KG	KG(EM)
1m	1000	80	100	4.0	4.5
1.25m	1250	80	100	5.0	5.5
1.5m	1500	80	100	6.0	6.50
2m	2000	80	100	8.0	8.50
3m	3000	80	100	12.0	12.50
Corner	520	80	100	4.5	5.0
End Cap	10	80	100	0.1	-
1m Infill	1000	80	100	2.7	-
1.25m Infill	1250	80	100	3.3	-
1.5m Infill	1500	80	100	4.0	-
2m Infill	2000	80	100	5.3	-

Photometric Performance

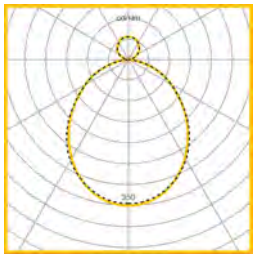

Suspended Opal
LED 4000K
LOR = 100%
SHR MAX = 1.52

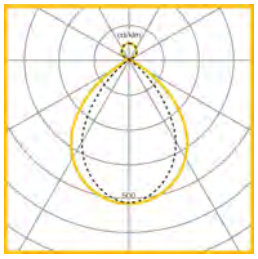

Suspended Pod
LED 4000K
LOR = 100%
SHR MAX = 1.45

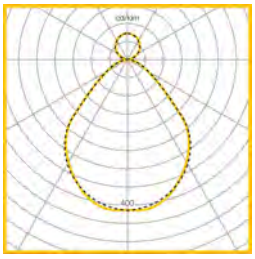

Suspended
Prismatic LED
4000K
LOR = 100%
SHR MAX = 1.51

To Specify

Modular linear LED system with integral uplight and a modern minimalist aesthetic for continuous or stand alone applications. 80% downlight, 20% uplight ratio. TP(a) Opal diffuser for general, circulation and feature areas. TP(a) Prismatic diffuser or Pod optic for EN12464-1 compliant schemes. Create long lines and features of light with a seamless aesthetic – as Whitecroft Lighting AVENUE METRO SUSPENDED.

Application images







Avenue Metro Surface

Modular linear LED system for surface mounting

PART NUMBER: AOCMOKIT



PRODUCT DESIGN

Product Colour
Weight (KG) 0.2
Height (mm) N/A
Length/Diameter (mm)
Cut Out (mm)
Optical Material N/A

LIGHTING DATA

Output (lumens) N/A
Emergency Lumens N/A
Wattage N/A
LL/CW 0
Optic (Light Distribution)
LOR % N/A
Colour Rendering (CRI) N/A
Light Source Colour
Colour Consistency Macadam (SDCM) N/A
ULR % N/A
Life (hrs) to L90B50 N/A
Life (hrs) to L80B50 N/A
Life (hrs) to L70B50 N/A
LXXB50 35000 hrs N/A
LXXB50 50000 hrs N/A
LXXB50 75000 hrs N/A
LXXB50 100000 hrs N/A
SHR Max N/A

TECHNICAL DATA

Lamp Type
Control Gear N/A
Emergency Type
Integral Controls
Mounting Method
IP Rating N/A
Min. ambient temperature N/A
Max. ambient temperature N/A

ELECTRICAL DATA

Power Factor Full Load N/A
Voltage N/A
Hertz N/A
Driver Qty N/A
Electrical class N/A
Min Dim % N/A
Output Current Tolerance % N/A
Output Current Ripple % N/A

MAX NUMBER PER CIRCUIT BREAKER

MCB B10A N/A
MCB B16A N/A
MCB C10A N/A
MCB C16A N/A

PRODUCT DESCRIPTION

AVENUE METRO CONTINUOUS - Mounting kit for continuous row mounting in Recessed, Suspended and Surface linear LED systems. One required per join.

DIMENSIONS & WEIGHT

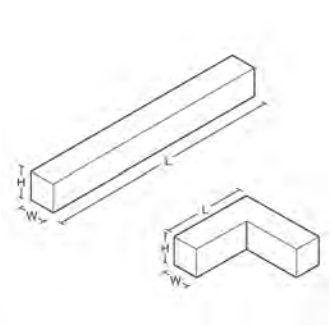

VERSION	MODULE DIMS	L	W	Ø	H_1	H_2	KG	CAØ	FIXING CENTRE
AOCMOKIT	N/A	N/A	N/A		N/A		0.2		

TO SPECIFY

Mounting kit for continuous row mounting in Recessed, Suspended and Surface linear LED systems. One required per join - as Whitecroft Lighting AVENUE METRO CONTINUOUS

©2023 Whitecroft Lighting | www: https://www.whitecroftlighting.com

Avenue Metro Suspended

Modular linear LED system with integral uplight for suspension mounting

PART NUMBER: AOPENDCW



PRODUCT DESCRIPTION

AVENUE METRO CONTINUOUS - End cap kit (pair) for surface and suspended linear LED system. One kit required per row.

PRODUCT DESIGN

Product Colour White
Weight (KG) 0.2
Height (mm) N/A
Length/Diameter (mm)
Cut Out (mm)
Optical Material N/A

LIGHTING DATA

Output (lumens) N/A
Emergency Lumens N/A
Wattage N/A
LL/CW 0
Optic (Light Distribution)
LOR % N/A
Colour Rendering (CRI) N/A
Light Source Colour
Colour Consistency Macadam (SDCM) N/A
ULR % N/A
Life (hrs) to L90B50 N/A
Life (hrs) to L80B50 N/A
Life (hrs) to L70B50 N/A
LXXB50 35000 hrs N/A
LXXB50 50000 hrs N/A
LXXB50 75000 hrs N/A
LXXB50 100000 hrs N/A
SHR Max N/A

TECHNICAL DATA

Lamp Type
Control Gear N/A
Emergency Type
Integral Controls
Mounting Method
IP Rating N/A
Min. ambient temperature N/A
Max. ambient temperature N/A

ELECTRICAL DATA

Power Factor Full Load N/A
Voltage N/A
Hertz N/A
Driver Qty N/A
Electrical class N/A
Min Dim % N/A
Output Current Tolerance % N/A
Output Current Ripple % N/A

MAX NUMBER PER CIRCUIT BREAKER

MCB B10A N/A
MCB B16A N/A
MCB C10A N/A
MCB C16A N/A

DIMENSIONS & WEIGHT

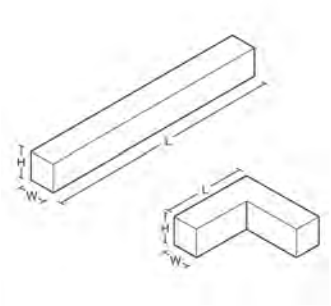

VERSION	MODULE DIMS	L	W	Ø	H_1	H_2	KG	CAØ	FIXING CENTRE
AOPENDCW	N/A	N/A	N/A		N/A		0.2		

TO SPECIFY

End cap kit (pair) for surface and suspended linear LED system. One kit required per row - as Whitecroft Lighting AVENUE METRO CONTINUOUS

©2023 Whitecroft Lighting | www: https://www.whitecroftlighting.com

Avenue Metro Surface

Modular linear LED system for surface mounting

PART NUMBER: AOSUSKIT



PRODUCT DESIGN

Product Colour
Weight (KG) 0.2
Height (mm) N/A
Length/Diameter (mm)
Cut Out (mm)
Optical Material N/A

LIGHTING DATA

Output (lumens) N/A
Emergency Lumens N/A
Wattage N/A
LL/CW 0
Optic (Light Distribution)
LOR % N/A
Colour Rendering (CRI) N/A
Light Source Colour
Colour Consistency Macadam (SDCM) N/A
ULR % N/A
Life (hrs) to L90B50 N/A
Life (hrs) to L80B50 N/A
Life (hrs) to L70B50 N/A
LXXB50 35000 hrs N/A
LXXB50 50000 hrs N/A
LXXB50 75000 hrs N/A
LXXB50 100000 hrs N/A
SHR Max N/A

TECHNICAL DATA

Lamp Type
Control Gear N/A
Emergency Type
Integral Controls N/A
Mounting Method
IP Rating N/A
Min. ambient temperature N/A
Max. ambient temperature N/A

ELECTRICAL DATA

Power Factor Full Load N/A
Voltage N/A
Hertz N/A
Driver Qty N/A
Electrical class N/A
Min Dim % N/A
Output Current Tolerance % N/A
Output Current Ripple % N/A

MAX NUMBER PER CIRCUIT BREAKER

MCB B10A N/A
MCB B16A N/A
MCB C10A N/A
MCB C16A N/A

PRODUCT DESCRIPTION

AVENUE METRO - Suspended mounting kit. One required per luminaire or infill

DIMENSIONS & WEIGHT

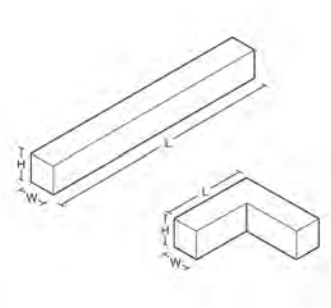

VERSION	MODULE DIMS	L	W	Ø	H_1	H_2	KG	CAØ	FIXING CENTRE
AOSUSKIT	N/A	N/A	N/A		N/A		0.2		

TO SPECIFY

Suspended mounting kit. One required per luminaire or infill - as Whitecroft Lighting AVENUE METRO

©2023 Whitecroft Lighting | www: https://www.whitecroftlighting.com

Kolo Suspended

High efficiency suspended luminaire





Without Trim Ring

Overview

Kolo brings style and efficiency to any application. With a host of optional attachments to add visual interest, Kolo is the optimum lighting solution.

Optics

- Nominal light output options:
- 300mm ø
  - 800 lumens, 6W
  - 1100 lumens, 9W
- 400mm ø
  - 1700 lumens, 14W
  - 2300 lumens, 19W
  - 2700 lumens, 21W
  - 3500 lumens, 28W
- Emergency Output (BLF):
  - 300mm - 240 Lumens
  - 400mm - 400 Lumens
- Polycarbonate opal diffuser, Tp(a) rated
- Available with 3000K and 4000K LED

Body

- 300mm or 400mm diameter bodies in cast aluminium with injection moulded base
- Finished in white or silver
- IP44
- Choice of integrated emergency options:
  - 3 hour emergency
  - COMEPS
- Also available with 'EW' Routefinder Wireless for addressable emergency testing without the need for a 2 core communication cable
- Emergency variants supplied with Lithium Iron Phosphate (LiFePO4) batteries
- Optional Command 5 microwave detector mounted behind the diffuser that can be set to one of two configurations;
  - Microwave presence detection with ON/OFF operation
  - Microwave presence detection with High/Low/Off set-back functionality. Can be set to switch from 100% down to set-back position of 50%, 30%, 20%, 10% or OFF
- Optional trim ring available for an alternative aesthetic finish (supplied separately)
- 3m suspension kit (supplied separately)
- Product also available as surface and IP65

Order codes

IP44 300mm Silver (4000K)

				B50		
IP44 300mm Silver	Fixed Output	3hr Emergency	LL/CW	L70	L80	L90
806 lumens (6.3W)	K4H364KS	K4H364KSEM	128	>100k	>100k	>100k
1136 lumens (8.8W)	K4H3124KS	K4H3124KSEM	129	>100k	>100k	92k

IP44 400mm Silver (4000K)

				B50		
IP44 400mm Silver	Fixed Output	3hr Emergency	LL/CW	L70	L80	L90
1755 lumens (13.7W)	K4H4154KS	K4H4154KSEM	128	>100k	>100k	100k
2359 lumens (18.5W)	K4H4204KS	K4H4204KSEM	128	>100k	>100k	95k
2793 lumens (21.3W)	K4H4274KS	K4H4274KSEM	131	>100k	>100k	87k
3549 lumens (27.7W)	K4H4354KS	K4H4354KSEM	128	>100k	>100k	75k

Accessories

3m Suspension Kit	KLSUSKIT
Trim Ring 300mm Silver	KLTR300S
Trim Ring 400mm Silver	KLTR400S

Options

COMEPS	Add suffix /EP	i.e K4H3124KS/EP
COMMAND 5 *	Replace H with Q5	i.e K4Q53124KS
DALI DIMMING	Replace H with Y	i.e K4Y3124KS
WHITE FINISH	Replace S with W	i.e K4H3124KW

* Command 5 not available in 300mm emergency or DALI products

For 3000K colour temperature, please contact Whitecroft

LED Performance

Colour Temp	RA (CRI)	Colour consistency
4000K	>80	MacAdam 3 SDCM

Dimensions



VERSION	H	KG	KG(EM)	Ø
300mm suspended	95	2.1	2.5	300
400mm suspended	95	3.5	3.9	400

Photometric Performance

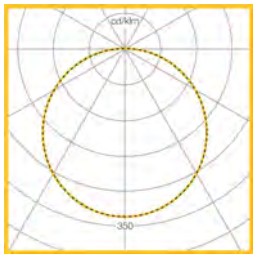

300mm ø 6.3W
806 Lumens
LOR = 100.0%
SHR MAX = 1.64

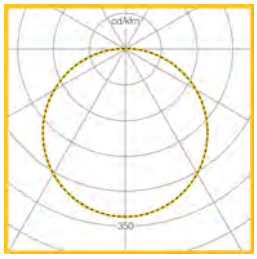

400mm ø 13.7W
1755 Lumens
LOR = 100.0%
SHR MAX = 1.64

Performance Guide

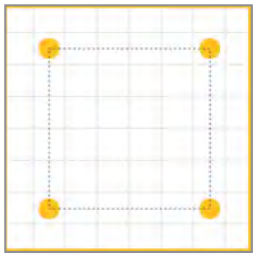

Lamps	19W LED
Illuminance	200 lux
Spacing	3.0m x 3.0m
Maintenance	0.8
Reflectance	70/50/20
Ceiling Height	2.7m
Working plane	0.8m

To Specify

Suspended circular IP44 LED luminaire in 300 or 400mm diameter. Polycarbonate opal diffuser. Optional integrated microwave presence detector with ON/OFF or set-back functionality - as Whitecroft Lighting KOLO SUSPENDED

Mirage LED Surface

Surface or suspended feature-rich circular downlight







Mirage LED Surface - Black



Mirage LED Surface (270mm Body Depth)



Mirage LED Surface - Silver



Quick and easy installation

Overview

An elegant circular surface mounted or suspended downlight with a cast aluminium body, semi specular reflector and integral driver.

Optics

- Semi Specular Reflector
- Light Output Options *
  - 1100 lumens (10W)
  - 2000 lumens (18W)
  - 3000 lumens (25W)
- Emergency Output *
  - 350 lumens
- Choice of 3000K ‘warm’ or 4000K ‘cool’ white colour temperature

* Outputs are based on 4000K colour temperature

©2023 Whitecroft Lighting | Contact number: +44 (0)161 330 6811

Body

- Cast aluminium body in two different heights
  - 200 mm **
  - 270 mm
- Choice of body colours
  - White (RAL 9003)
  - Silver (RAL 9006)
  - Black (RAL 9005)
- Overall diameter 178mm
- Surface mounted or suspended using additional kit
- 2 suspension kit options - wire suspnded or solid mount for trunking, drop rod or conduit
- Integral Fixed Output or DALI driver
- 3hr Emergency or COMEPS emergency options (COMEPS can be Easytest if required)
- Emergency variants supplied with a NiCd battery
- Quick and easy installation, simply secure the holding bracket and slide the gear tray and outer body into place
- Holding bracket allows for Screw or BESA mounting
- Optional anti-glare control ring to reduce glare (accessory supplied separately)
- IP20

** Not available with emergency, for emergency option use 270mm body

---

Order codes

Mirage LED Surface (200mm)

				B50		
4000K White	Fixed Output	3hr Emergency	LL/CW	L70	L80	L90
1100 lumens (10W)	MBSH14K20W	Not available	105	>60k	60k	22k
2000 lumens (18W)	MBSH24K20W	Not available	105	>60k	60k	22k
3000 lumens (25W)	MBSH34K20W	Not available	107	>60k	60k	22k

Mirage LED Surface (270mm)

				B50		
4000K White	Fixed Output	3hr Emergency	LL/CW	L70	L80	L90
1100 lumens (10W)	MBSH14K27W	MBSH14K27WEM	105	>60k	60k	22k
2000 lumens (18W)	MBSH24K27W	MBSH24K27WEM	105	>60k	60k	22k
3000 lumens (25W)	MBSH34K27W	MBSH34K27WEM	107	>60k	60k	22k

Options

DALI	Replace H with Y	MBSY14K27W
COMEPS	Add suffix EP	MBSH14K27WEP
SILVER	Replace W with S	MBSY14K27S
BLACK	Replace W with B	MBSY14K27B
3000K	Replace 4K with 3K	MBSH13K27W

Accessories/Attachments

Description	Order Code
Anti-glare control insert	MLA-AGC
Suspension kit with 5m wire drop	MBSUSKITW5M
Mounting plate kit for trunking, conduit or drop rod	MBSUSKITWSOLID

LED Performance

Colour Temp	RA (CRI)	Colour consistency
3000K / 4000K	>80	MacAdam 3 SDCM

Dimensions

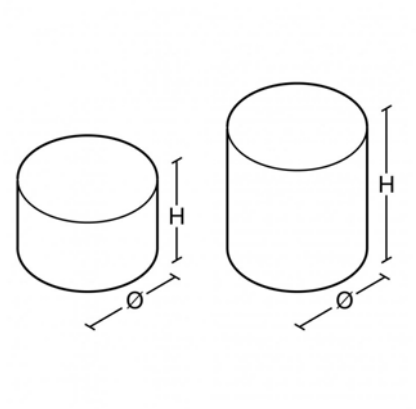

VERSION	Ø	H	KG	KG(EM)
200mm Body	178	201	1.4	Not available
270mm Body	178	278	1.8	2.2

Photometric Performance

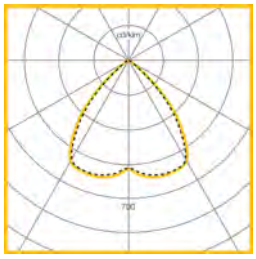

10W LED 4000K
1057 Lumens
LOR = 100
SHR MAX = 1.62

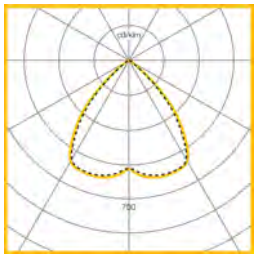

18W LED 4000K
1901 Lumens
LOR = 100
SHR MAX = 1.62

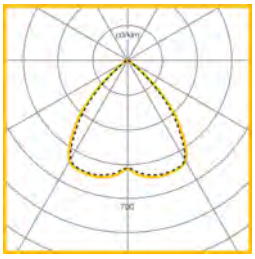

25W LED 4000K
2686 Lumens
LOR = 100
SHR MAX = 1.62

Performance Guide

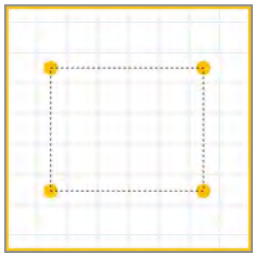

Lamps	18W
Illuminance	218 lux
Spacing	3.0m x 2.4m
Maintenance	0.8
Reflectance	70/50/20
Working plane	0

To Specify

Elegant circular surface mounted or suspended downlight with a cast aluminium body, specular reflector and integral driver. Clean aesthetic with no visible body fixings, simple slide and click installation and a choice of 200mm or 270mm body height - as Whitecroft Lighting MIRAGE LED SURFACE.

Ceiling and Pendant Luminaires · Cerchio Large

CERL-P 314.840.1/DALI



Colours	Article no.	EAN
silver	667396	4043544767110
black	667397	4043544767127
white	667398	4043544767134

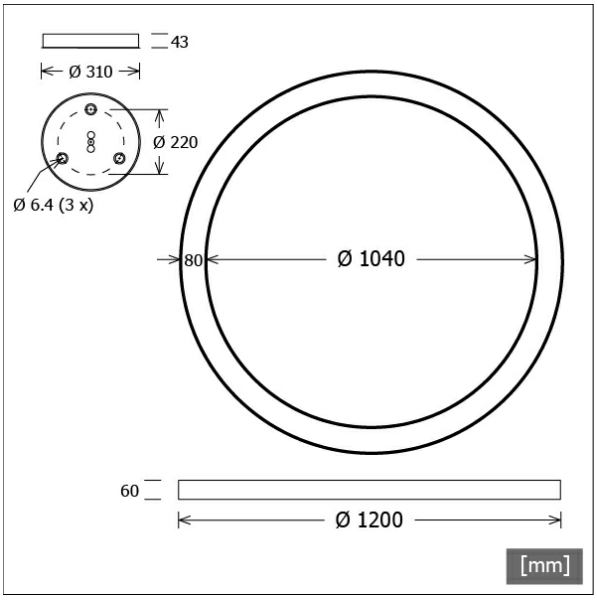

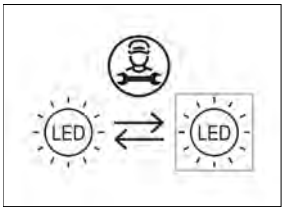

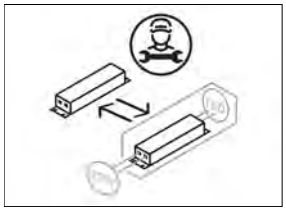

Description

- prestigious pendant luminaire with ring design
- for homogeneous direct-indirect illumination and sophisticated architectural lighting
- outstanding ease of maintenance
- no UV and thermal emissions
- high-quality aluminium housing
- one-piece ring diffuser made from opal acrylic glass
- wire-rope suspension 4-fold with height adjustment (length: 3000 mm) and ceiling canopy
- transparent connecting cable (5-core, pre-fabricated), ceiling canopy made from aluminium in the same colour as the luminaire
- ballast (LED converter DALI, dimmable) integrated in ceiling canopy

Standard options

3000 K

Special options

RAL 2700 K

Lighting data / Norms

Lamps	LED Band / CRI 90 / 4000 K
Lifetime	L90 B50 50.000 h L80 B50 100.000 h L80 B20 50.000 h
System power	234.5 W
Luminaire luminous flux	14560 lm
System efficiency	62.08 lm/W
Module efficiency	105.00 lm/W
UGR class	≤16
Supply voltage	220 - 240 V / 50 - 60 Hz
Protection class	I
Type of protection	IP20

Dimensions / Weights

Outer diameter	1200 mm
Inner diameter	1040 mm
Height	60 mm
Net weight	10.00 kg
Gross weight	13.60 kg

© LTS Licht & Leuchten GmbH · lts-light.com · Technical data are subject to change. · Version: 17.10.2022

CERL-P 314.840.1/DALI

Cerchio Large (1xLED 235W 840/4000K 14560lm)

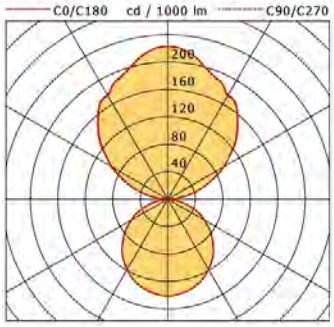

	C0	C90	C180	C270
0°	141	141	141	141
30°	118	119	118	119
60°	61	61	61	61
90°	1	0	1	0
120°	94	95	94	95
150°	175	176	175	176
180°	223	223	223	223

cd / 1000 lm

LDC unsuitable for cone representation.
The C0 angle is oversized.

η	LED
Efficiency	63 lm/W
Direct/Indirect	↓ 40% / ↑ 60%
System Power	235 W
UGR	X=4H, Y=8H
Reflection factors	70/50/20
UGR C0/C180	13.2
UGR C90/C270	13.2
CIE Flux Codes	47 79 96 40 101
Ra/CRI	>80

LTS

Accessories



ZB-ORGR DONGLE
Organic Response IR dongle kit



ZB-ORGR GATEWAY
Organic Response IoT Gateway Cascade Series



ZB-ORGR-A SENSOR
Organic Response sensor for surface mounting



ZB-ORGR-P SENSOR/3000
Organic Response sensor for pendant mounting

© LTS Licht & Leuchten GmbH · lts-light.com · Technical data are subject to change. · Version: 17.10.2022

ARDEN 4 (ARD-90022)

IP20

Product description

Down - 480 mm



Luminaire Structure

- Extruded aluminium bended profile with powder coating
- Stainless steel fasteners in grade 316
- Stainless steel, adjustable, suspension (1.5 m) complete with electrical wires in white for mounting
- PMMA diffuser with Opal (UGR <19) and micro prismatic (UGR <13) options for better glare control
- Up and down light distribution options
- Passive thermal management
- Integral control gear
- Wireless control available through Bluetooth connection
- Daylight and occupancy sensor options
- Emergency module (1 or 3 hours) is available upon request with 3 options (BASIC, SELF-TEST, PRO-DALI)

Light symbol



P

Product colour



01 - Black (RAL 9011)

03 - White (RAL 9003)



05 - Matt Silver (RAL 9006)

Special finishes upon request



SU01 - Concrete - Urban



SU02 - Softscape - Urban



SU03 - Stone - Urban



SU04 - Corten - Urban



SW01 - Oak - Woodland



SW02 - Walnut - Woodland



SW03 - Pine - Woodland

We reserve the right to make technical and design changes.

THAILAND
LIGMAN Lighting Co.,Ltd.
17/2 Moo 4, Monthong, Bang Nam Priao,
24150 Chachoengsao - Thailand
info@ligman.com

ARDEN 4 (ARD-90022)

Technical information

Light source	480 LED
Light source type	LED
Dimming type	DALI, 1-10V, On/Off
Material	Aluminium
Weight	4.7 kg
Operating temperature	-20 °C to 40 °C

Luminaire	
Power	59 W
Lumen	6857 - 7838 lm
Efficacy	116 - 133 lm/W
CCT / CRI	3000K CRI80, 4000K CRI80
Drive current	500 mA
Driver option	Remote driver (included)
Driver	Constant current (CC)
Input voltage	500 mA, 120 VDC

Optic	O [108°], P [93°]
Bug	B3-U0-G1
ULR	0%
ULOR	0%
CIE flux code nº3	96, 97
MacAdam Ellipse	3 SDCM
Lifetime L90B10 (hours)	> 23,000
Lifetime L80B10 (hours)	> 45,000
Lifetime L80B50 (hours)	> 50,000

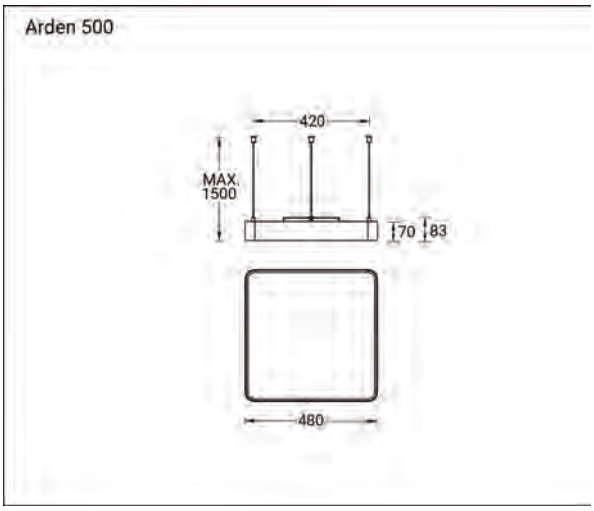

Accessories



Supply cable surface mounting box
A80981

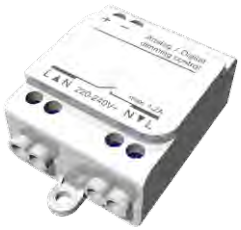

Wireless bluetooth converter
A90291



Xpress wireless switch
A90591

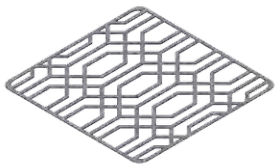

Decorative pattern - Type A for ARDEN 500 mm
A91621

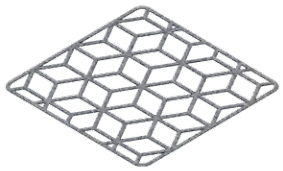

Decorative pattern - Type B for ARDEN 500 mm
A93021

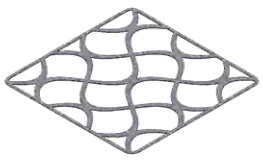

Decorative pattern - Type C for ARDEN for ARDEN 500 mm
A94421



Emergency module - 250V - BASIC
EM250V-BA



Emergency module - 250V - PRO-DALI
EM250V-DA

We reserve the right to make technical and design changes.

THAILAND
LIGMAN Lighting Co.,Ltd.
17/2 Moo 4, Monthong, Bang Nam Priao,
24150 Chachoengsao - Thailand
info@ligman.com

ARDEN 4 (ARD-90022)



Emergency module - 250V - SELF-TEST
EM250V-ST



DALI Control System
Control-DALI

We reserve the right to make technical and design changes.

THAILAND
LIGMAN Lighting Co.,Ltd.
17/2 Moo 4, Monthong, Bang Nam Priao,
24150 Chachoengsao - Thailand
info@ligman.com

ARDEN 4 (ARD-90032)

IP20

Product description

Down - 595 mm



Luminaire Structure

- Extruded aluminium bended profile with powder coating
- Stainless steel fasteners in grade 316
- Stainless steel, adjustable, suspension (1.5 m) complete with electrical wires in white for mounting
- PMMA diffuser with Opal (UGR <19) and micro prismatic (UGR <13) options for better glare control
- Up and down light distribution options
- Passive thermal management
- Integral control gear
- Wireless control available through Bluetooth connection
- Daylight and occupancy sensor options
- Emergency module (1 or 3 hours) is available upon request with 3 options (BASIC, SELF-TEST, PRO-DALI)

Light symbol



P

Product colour



01 - Black (RAL 9011)

03 - White (RAL 9003)



05 - Matt Silver (RAL 9006)

Special finishes upon request



SU01 - Concrete - Urban



SU02 - Softscape - Urban



SU03 - Stone - Urban



SU04 - Corten - Urban



SW01 - Oak - Woodland



SW02 - Walnut - Woodland



SW03 - Pine - Woodland

We reserve the right to make technical and design changes.

THAILAND
LIGMAN Lighting Co.,Ltd.
17/2 Moo 4, Monthong, Bang Nam Priao,
24150 Chachoengsao - Thailand
info@ligman.com

ARDEN 4 (ARD-90032)

Technical information

Light source	672 LED
Light source type	LED
Dimming type	DALI, 1-10V, On/Off
Material	Aluminium
Weight	6.1 kg
Operating temperature	-20 °C to 40 °C

Luminaire	
Power	73 W
Lumen	8704 - 9887 lm
Efficacy	119 - 135 lm/W
CCT / CRI	3000K CRI80, 4000K CRI80
Drive current	450 mA
Driver option	Remote driver (included)
Driver	Constant current (CC)
Input voltage	450 mA, 168 VDC

Optic	O [108°], P [93°]
Bug	B3-U0-G1
ULR	0%
ULOR	0%
CIE flux code nº3	96, 97
MacAdam Ellipse	3 SDCM
Lifetime L90B10 (hours)	> 23,000
Lifetime L80B10 (hours)	> 45,000
Lifetime L80B50 (hours)	> 50,000

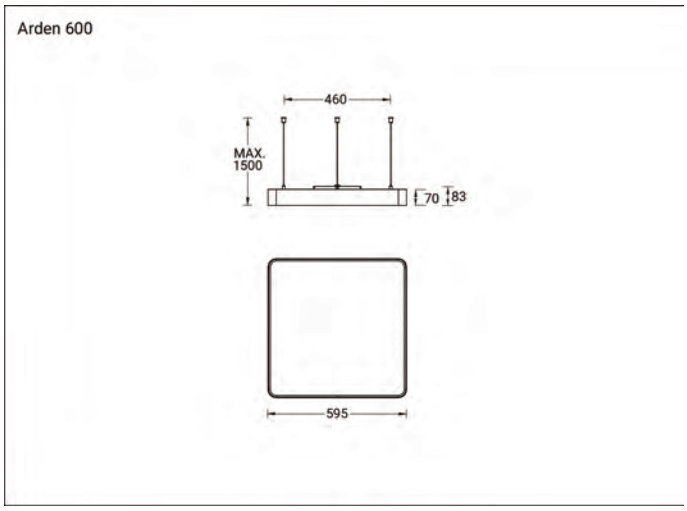

Accessories



Supply cable surface mounting box
A80981

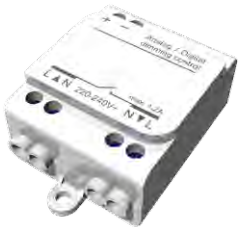

Wireless bluetooth converter
A90291



Xpress wireless switch
A90591

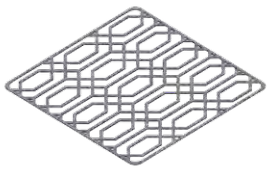

Decorative pattern - Type A for ARDEN 600 mm.
A91721

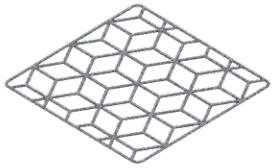

Decorative pattern - Type B for ARDEN 600 mm
A93121

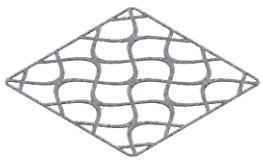

Decorative pattern - Type C for ARDEN for ARDEN 600 mm
A94521



Emergency module - 250V - BASIC
EM250V-BA



Emergency module - 250V - PRO-DALI
EM250V-DA

We reserve the right to make technical and design changes.

THAILAND
LIGMAN Lighting Co.,Ltd.
17/2 Moo 4, Monthong, Bang Nam Priao,
24150 Chachoengsao - Thailand
info@ligman.com

ARDEN 4 (ARD-90032)



Emergency module - 250V - SELF-TEST
EM250V-ST



DALI Control System
Control-DALI

We reserve the right to make technical and design changes.

THAILAND
LIGMAN Lighting Co.,Ltd.
17/2 Moo 4, Monthong, Bang Nam Priao,
24150 Chachoengsao - Thailand
info@ligman.com

Tegan 2

LED recessed, surface or suspended square slimline luminaire







Tegan 2 with Surface Kit



Tegan 2 with Suspended Kit

Overview

Suitable for a wide range of applications, Tegan 2 is a shallow, edge lit luminaire delivering uniform and controlled light. With its prismatic quadraprism diffuser and a luminance below 3000cd/m², schemes compliant with LG7 and EN12464-1 can be consistently and affordably achieved. The opal diffuser is ideal for general areas whilst maintaining a family visual throughout the building.

Optics

- Quadraprism Tp(b) diffuser with luminance less than 3000 cd/m2 at 65° and above
  - Light outputs:
    - 3331 lumens (27W) 123 ll/cw
    - 4133 lumens (34W) 121 ll/cw
  - Emergency Output - 378 Lumens

- Quadraprism Tp(a) diffuser with luminance less than 3000 cd/m2 at 65° and above
  - Light outputs:
    - 3294 lumens (31W) 106 ll/cw
    - 4099 lumens (41W) 100 ll/cw
  - Emergency Output - 308 Lumens

- Opal Tp(b) diffuser for general area lighting
  - Light outputs:
    - 3303 lumens (25W) 132 ll/cw
    - 4126 lumens (32W) 129 ll/cw
    - 5128 lumens (41W) 125 ll/cw
  - Emergency Output - 350 Lumens

- Opal Tp(a) diffuser for general area lighting
  - Light outputs:
    - 3301 lumens (28W) 118 ll/cw
    - 4098 lumens (36W) 113 ll/cw
    - 5155 lumens (47W) 109 ll/cw
  - Emergency Output - 330 Lumens

Lifetime Data

Version	L70B50	L80B50	L90B50
Opal 3300lm	>100K	>100K	57K
Quad 3300lm	>100K	>100K	55K
Opal 4100lm	>100K	>100K	53K
Quad 4100lm	>100K	>100K	51K
Opal 5100lm	>100K	>100K	48K

Body

- Steel body finished white
- Slim body profile
- IP44 protection from front, IP20 from behind
- RAL Colour: White RAL9003
- For lay in ceiling integration on T15 and T25 ceilings
- Choice of emergency options:
  - Standard 3 hour self contained
  - COMEPS 3 hour DALI addressable self contained
- Also available with 'EW' Routefinder Wireless for addressable emergency testing without the need for a 2 core communication cable
- Emergency variants supplied with a NiCd battery
- Standard luminaires supplied complete with remote driver
- Emergency luminaires supplied with integrated driver/inverter within rear enclosure
- Optional mounting accessories:
  - TESPBF - plasterboard frame
  - TESSUSFRKIT - **Tegan 2 Suspended** mounting kit
  - TESSURFR - **Tegan 2 Surface** mounting kit
- Can be used with MSU Kit for Mental Health - Medium Secure Unit & Anti-Ligature applications
- Note: All DALI variants require 1 DALI address per driver. COMEPS variants will require an additional DALI address.

LED Performance

Colour Temp	RA (CRI)	Life expectancy	Colour consistency
4000K	80	>100,000 hrs L80B50	MacAdam 3 SDCM

Dimensions

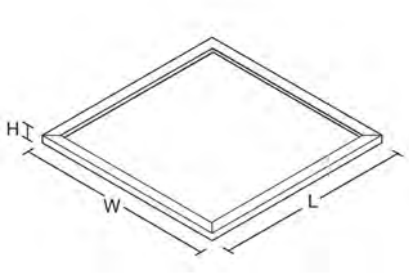

VERSION	L	W	H	KG
Standard	595	595	21	5.4

Driver height 27.5mm

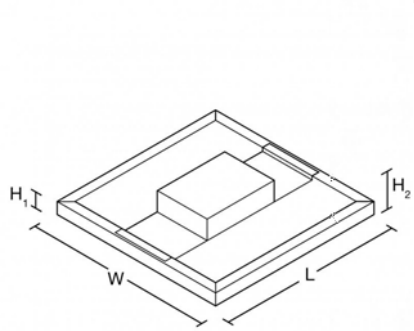

VERSION	L	W	H1	H2	KG(EM)
Emergency	595	595	21	61	7.0

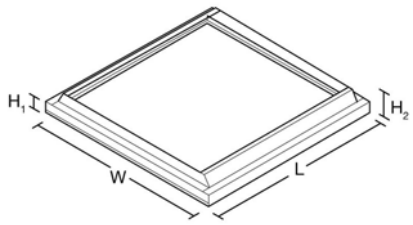

VERSION	L	W	H1	H2	KG
Surface Frame	601	601	37	68	2.5

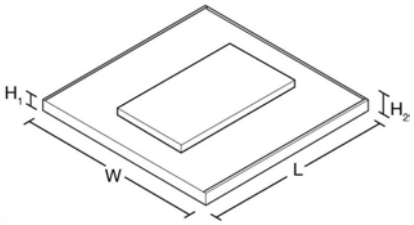

VERSION	L	W	H1	H2	KG
Suspended Frame	611	611	33	61*	2.5

*Including cover pan. Cover pan is not fitted when used with an emergency luminaire. See installation leaflet.

Photometric Performance

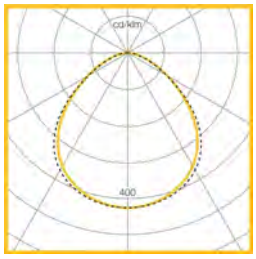

Quadraprism 4133 lumen, 34W
LOR = 100%
SHR MAX = 1.57

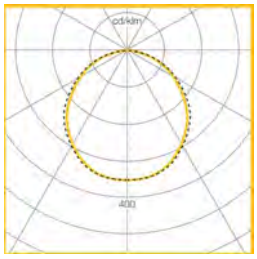

Opal 4126 lumen, 32W
LOR = 100%
SHR MAX = 1.61

To Specify

600mm x 600mm recessed LED luminaire with slimline steel body and Quadraprism optic for LG7 compliant schemes or opal diffuser for general area lighting. Suitable for lay in Exposed Tee ceilings – as Whitecroft Lighting TEGAN 2

OLV344 LED

132-0560



Description

IP65, Class I. IK07. Marine-grade, die-cast aluminium alloy. 5CE superior corrosion protection including PCS hardware. Silicone CCG® Controlled Compression Gasket. Safety glass lens. Two cable entries. Integral EC electronic converter. CAD-optimised optics for superior illumination and glare control. OLC® One LED Concept. Factory installed LED circuit board. 1-10V or DALI interface on request. Optional 2200 K version available. To be specified at time of ordering. Can be mounted up or down.

Beam Type	asymmetric, 'forward throw' [A60]
Light Source	LED-24/48W / 700 mA - 3000 K
CRI	80
Gear Type	EC

Nominal Luminous Flux (lm)

LED Lumens	246 lm
LEDs	24
Total Lumens	5903 lm
Tj	85 °C

Rated Luminous Flux (lm)

LED Lumens	185.9 lm
Total Lumens	4462.2 lm
Ta	25 °C

Rated Input Power	55 W

OLV344 LED

132-0560

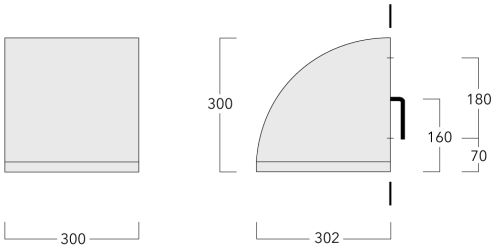

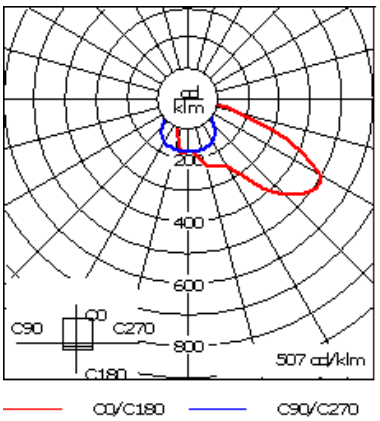

Material Specification

Body:	Marine-grade die-cast aluminium alloy
Weight (kg):	11.40
Lens:	Safety glass lens
Colours:	RAL9004 Signal black RAL9006 White aluminium RAL9007 Grey aluminium RAL7016 Anthracite grey RAL9016 Traffic white
Gasket:	Silicone CCG® Controlled Compression Gasket
Fasteners:	PCS Polymer Coated Stainless Steel Hardware
Ingress protection:	IP65
Impact protection:	IK07
Corrosion protection:	5CE
Surge protection:	6/6 kV (optional SP10)

Electrical Specification

Power supply:	220-240V / 50-60 Hz
Driver / Ballast:	Integral EC electronic converter
Cable:	Two cable entries

Lifetime

Ta=25° L90B10 > 90000h

LED and LED driver can be exchanged by qualified personnel.



Electrical Accessories

Surge Protection SP10

The luminaire is fitted with an electronic converter featuring high voltage surge protection 6/6kV exceeding the requirements of EN 61000-4-5. For installation in high-risk areas, the optional SP10 (10/10kV) surge protection accessory is recommended. For comprehensive protection of the luminaires with LED light sources and electronic drivers against the effects of lightning and electrical surges, we generally recommend primary (Type 1) and secondary (Type 2) surge arrestors be installed in the sub-distribution.

SP10 Integral

430-0020

FAGERHULT



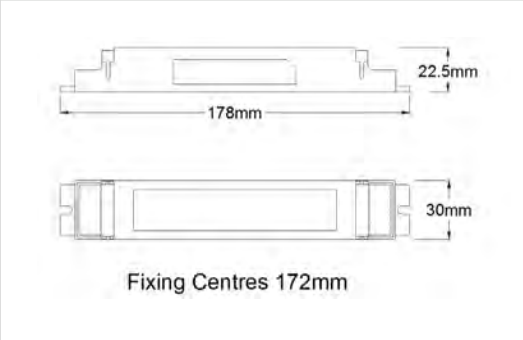

NLP/1 - LED Conversion Range

GENERAL INFORMATION

A 3 hour emergency lighting conversion kit which operates with Long Life LiFePO4 batteries. The unit is designed to suit an extremely wide range of LED types and circuits. The NLP/1 automatically adjusts the output LED current to provide the best match between the battery and the load, providing maximum illumination whilst ensuring full battery duration. The batteries used with this unit not only provide double the life of traditional emergency lighting batteries, but consume far less power during their operational life.

- Slim Module Suitable for Linear Applications
- Deep Discharge Protection
- Low Power Consumption
- Long Life LiFePO4 Batteries
- Average Emergency Power - 2W

TECHNICAL DETAILS

Mains Supply	230-240V AC 50/60 Hz
Power Rating	3.2W 35mA λ = 0.40
Duration	3-Hours
Recharge Period	24-Hours
Battery Size & Type	3.2V 3.8Ah LiFePO4 Cell
Charge Current	225mA nominal
Module Weight	0.085Kg
Battery Weight	0.11Kg
Max Ta and Tc	Ta - 50 °C - Tc - 70 °C
Max Battery Tc	55 °C
Battery Discharge	900mA nominal
Discharge Voltage	2.4 Volts
Ingress Protection	IP20
Terminal - Push Wire	0.5mm^2 - 1.5 mm^2
Dimensions (LxWxH)	178 x 30 x 22.5 (f/c 172mm)
Battery Dimensions	90mm x 28mm (LxØ)