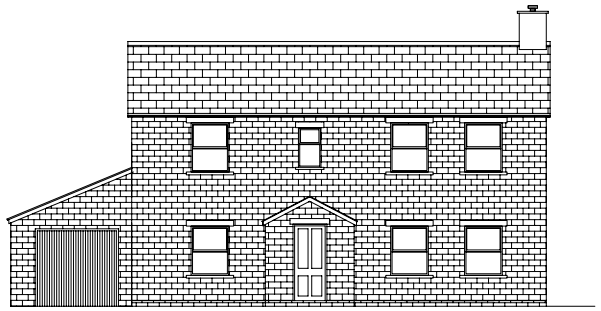

Front (South) Elevation 1:200

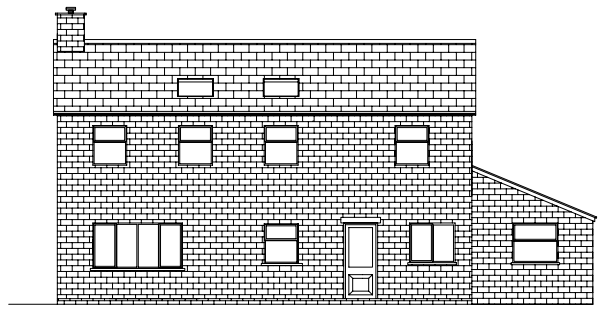

Rear (North) Elevation 1:200

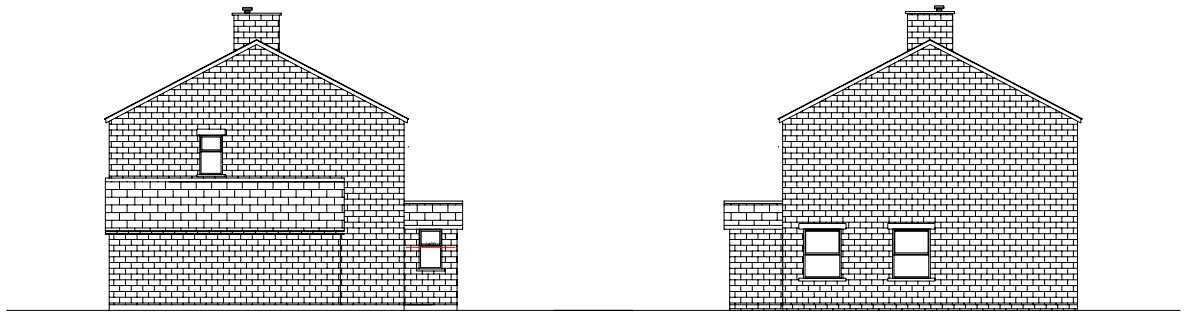

End (West) Elevation 1:200

End (East) Elevation 1:200

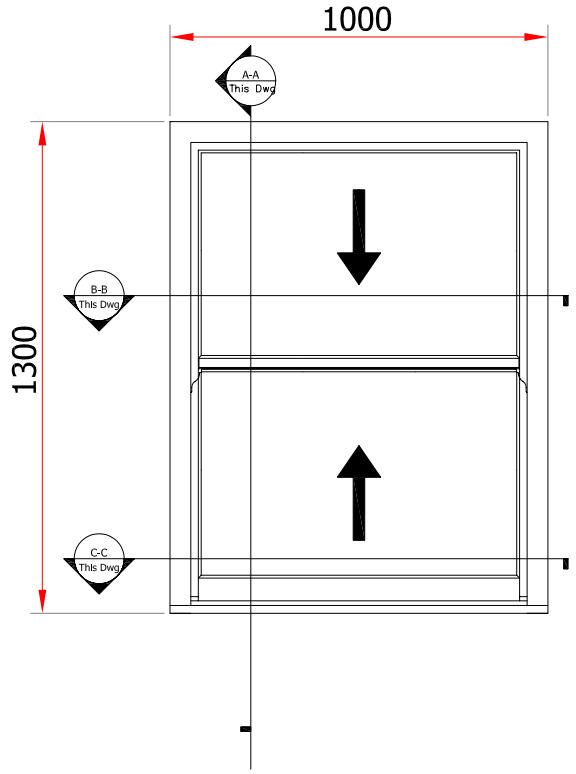

Sash Window 1:50

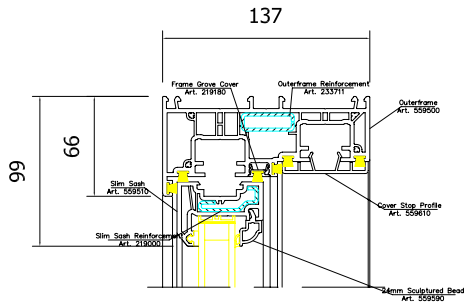

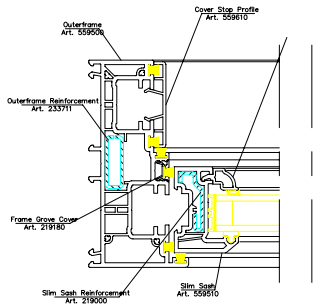

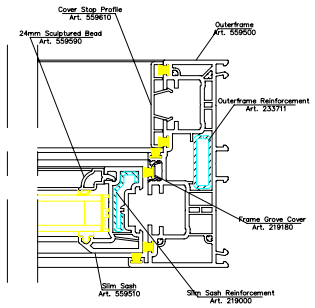

Section B-B 1:5

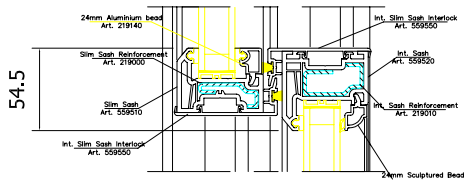

Section A-A 1:5

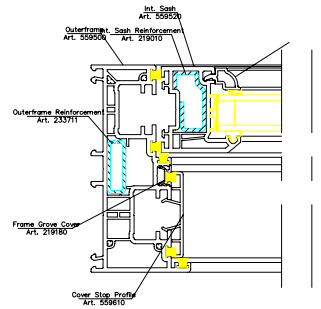

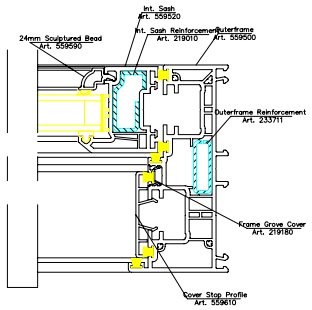

Section C-C 1:5

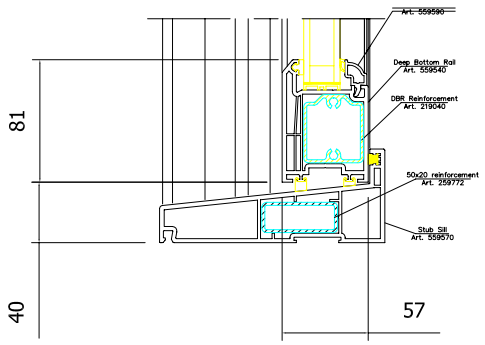

NOTE. Casement Windows to Sides and Rear Similar Sections
All windows PVCu, Rehau Heritage, Anthracite Grey or similar

NF-PALOMA

Philip A Lomas B Sc, 7 Park Crescent Furness Vale, High Peak, SK23 7PU

DRAWN	PAL	DATE	Nov 2016
JOB No	JH/01/2016	SCALE	As Shown@ A3
DWG No	11	Rev	

1 Reddish Green, Bowden Lane
Chapel en le Frith SK23 0JQ
Mr & Mrs Harrison

Windows