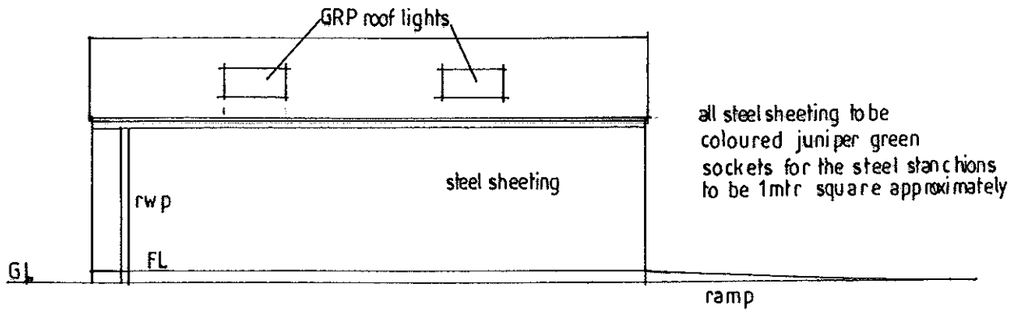

PROPOSED SIDE SOUTH ELEVATION.

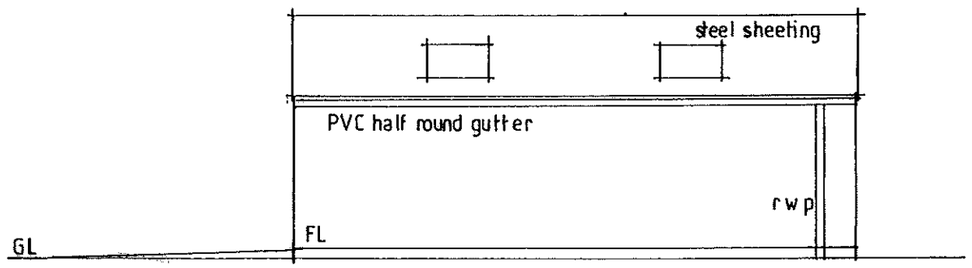

PROPOSED SIDE NORTH ELEVATION.

The existing timber implement shed with its wooden floor is to be replaced by a steel clad one 9.144mm long by 7000mm wide, having an eaves height of 2500mm, a ridge height of 3900mm with a roof pitch of 20 degrees.
178 x 102mm UB's are to be used for the main stanchions, rafters and 3No gable stanchions with all steelwork receiving two coats of red oxide.
75 x 175mm tanalised timbers will be used for the eaves beams and purlins with 75 x 125mm timbers for the sheeting rails.
The roof will be clad with 0.7mm thick polyester coated box profile steel sheeting, which incorporates 4No 1500mm GRP roof lights with a matching steel ridge along with barge boards to both gables with the sides being clad with similar sheeting 0.5mm thick.
Half round PVC gutters complete with 110mm diameter down spouts will be provided on each side of the building terminating with an outlet that discharges into a 110mmPVC pipe connected to a suitable shack or other appropriate outlet such as a one metre square soak away filled with clean 50mm limestone.
There will be purpose designed socket type foundations for the steel stanchions in an appropriate 1: 2: 4 concrete raft.
The existing timber implement shed is to be demolished and its contents stored in a temporary steel container on site whilst the new base and building are being constructed.
The four sycamore trees the approximate positions of which are indicated on the plans will be cut down, their roots dug out and all removed from the site for appropriate disposal.

PROPOSED FABRICATED STEEL CLAD BUILDING TO REPLACE THE EXISTING TIMBER IMPLEMENT SHED USED BY THE DOVE HOLES CRICKET CLUB AT THEIR GROUND AT HALLSTEADS, DOVE HOLES, BUXTON, DERBYSHIRE. SK17 8BJ.

SCALE 1: 100. NOVEMBER 2013.

