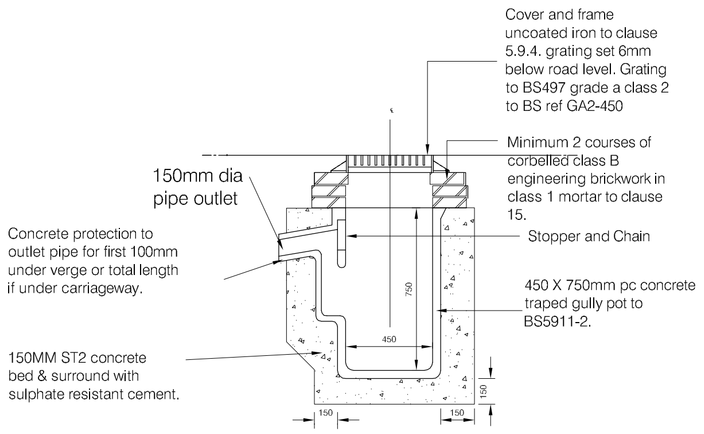

Pre-Cast Concrete Trapped Road Gulley Detail

Scale 1:20

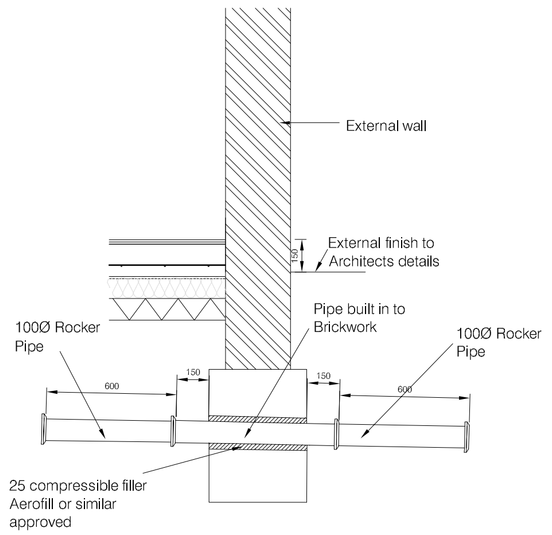

Pipe passing through wall using rocker pipes

Scale 1:20

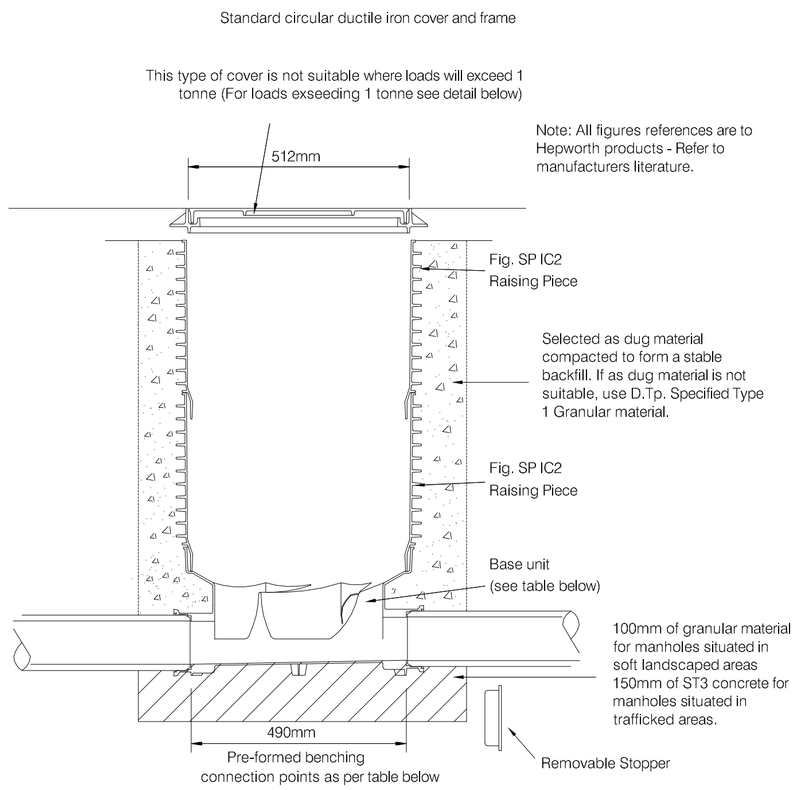

Base unit type	Pipe size	No of connections
SP IC1/1	100Ø	6
SP IC1/2	100Ø	6
SP IC2/1	150Ø	4

PPIC - For Manholes
0.6-1.2m Deep

Scale 1:10

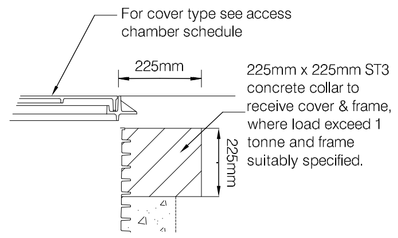

Cover detail where load exceeds 1 tonne

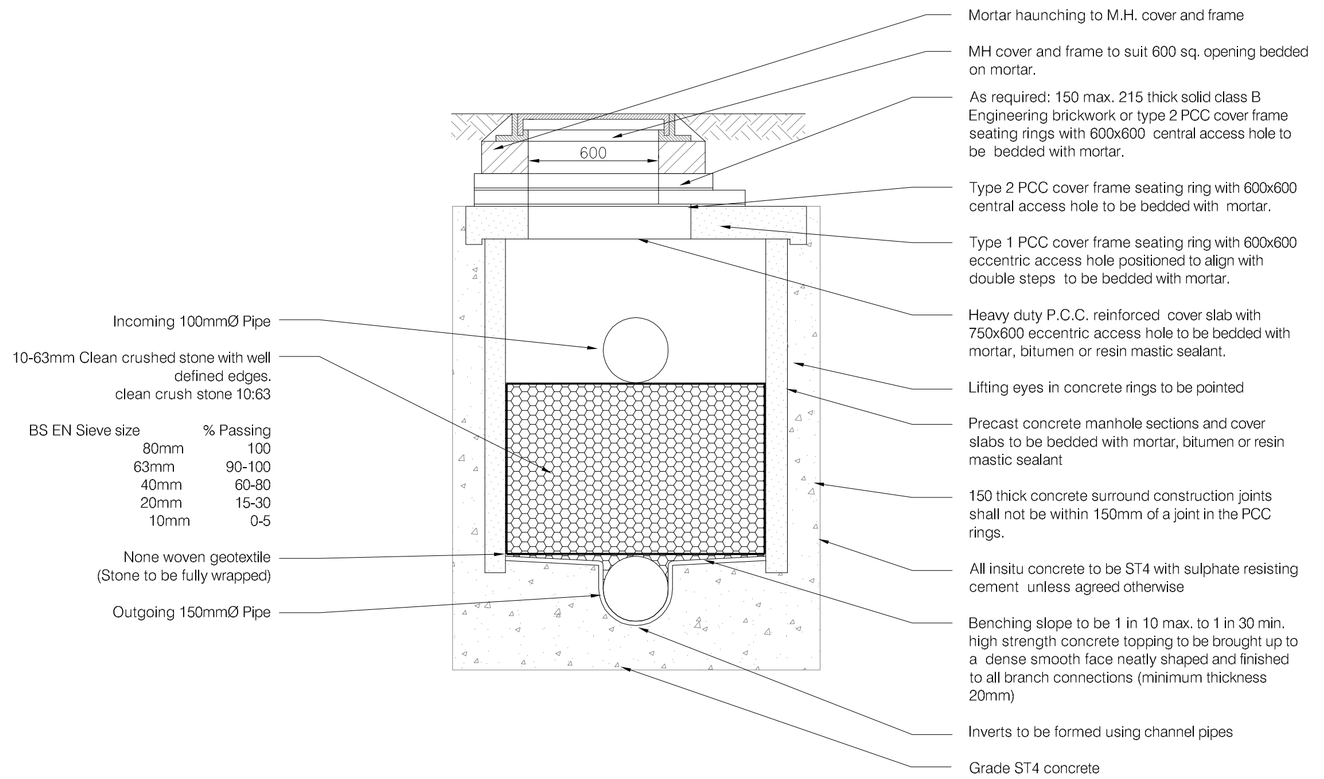

BS EN Sieve size	% Passing
80mm	100
63mm	90-100
40mm	60-80
20mm	15-30
10mm	0-5

None woven geotextile (Stone to be fully wrapped)

1200mm Stone filled chamber

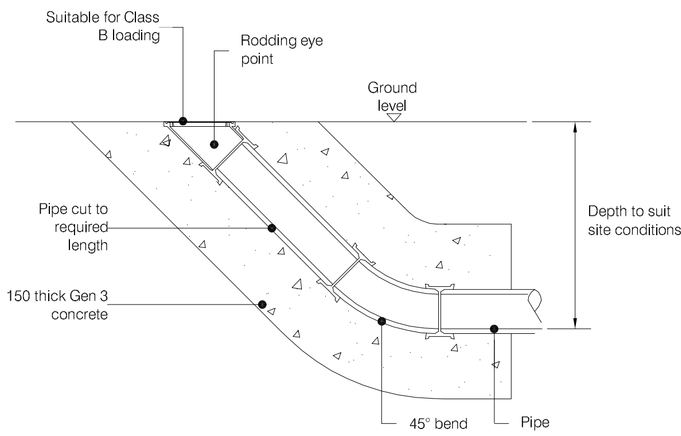

Rodding Eye

Scale 1:10

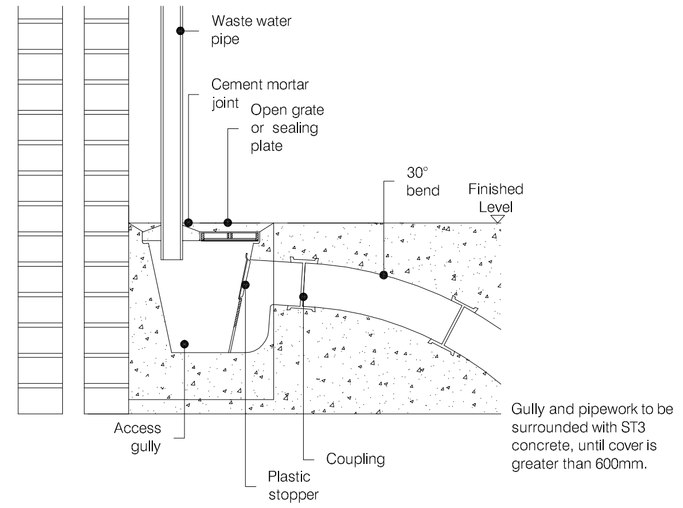

Back Inlett Gully Detail

Scale 1:10

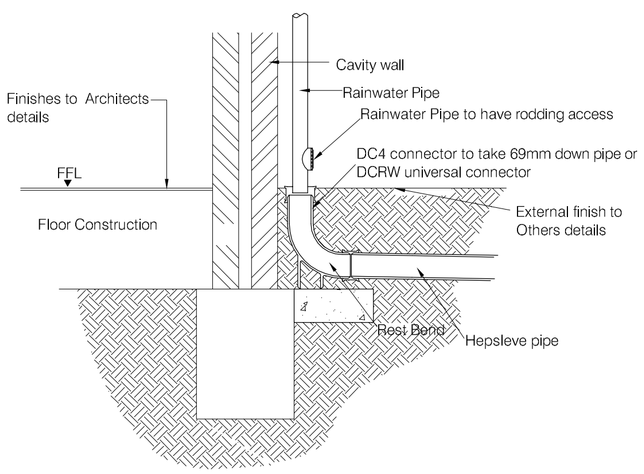

Typical Rainwater Pipe

Scale: 1:20

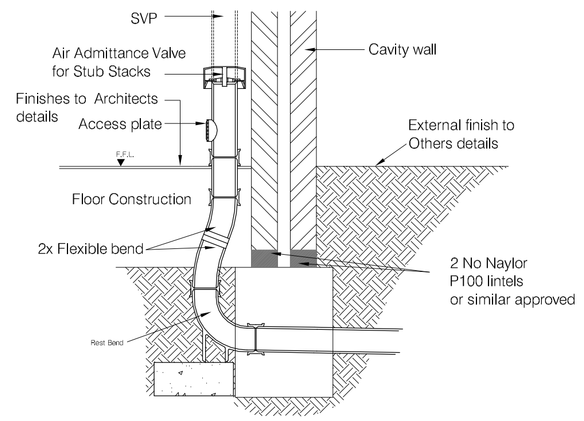

Typical Soil and Vent Pipe and Stub Stack detail

Scale: 1:20

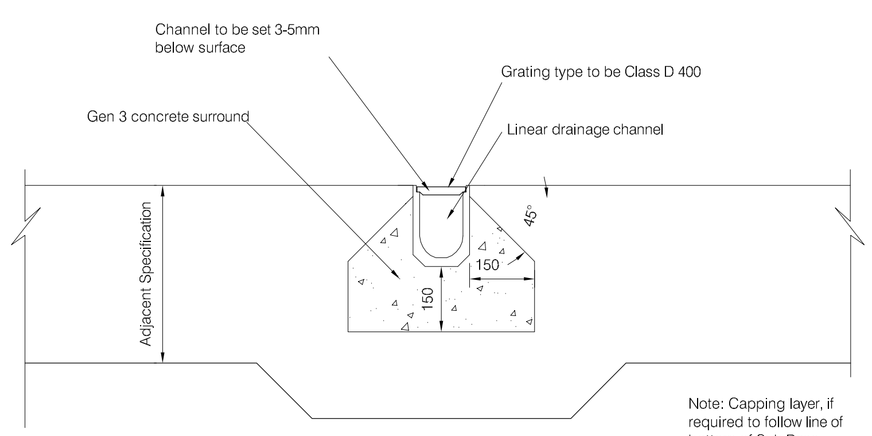

Linear Drain

Scale 1:10

© This drawing and the details depicted are the copyright of BSP Consulting and may not be reproduced except by written permission.
OS Licence no. 100041272

A1

0 10 20 30 40 50

Millimetres At Original Drawing Size

General Notes

1. DO NOT SCALE.

2. This drawing is to be read in conjunction with all other relevant drawings and details.

3. Should there be any conflict between the details indicated on this drawing and those indicated on other drawings the Engineer should be informed PRIOR to construction on site.

4. Until technical approval has been obtained from the relevant Authority, it should be understood that all drawings issued are Preliminary and NOT for construction. Should the contractor commence site work prior to such approval being given, it is entirely at his own risk.

5. All dimensions are in millimetres unless otherwise stated.

6. The BSP Risk Assessments for this project must be reviewed PRIOR to the commencement of any works on site.

7. It is the responsibility of the contractor to execute the works at all times in strict accordance with the requirements of the Health and Safety at Work Act 1974, and the C.D.M. Regulations 1994/2007.

8. It is the responsibility of the Contractor to locate any service apparatus in the vicinity of the works. The Client will accept no claims whatsoever in respect of losses or damage caused in respect of such apparatus, however caused.

9. The Contractor shall check all tie-ins for line and level with existing before commencing any works. The Engineer should be notified immediately in writing, should any errors be found.

10. All levels are related to ordanance datum.

11. All private drainage works to be in accordance with the requirements of Building Regulations 2000, Part H, "Drainage and Waste disposal".

12. Pipes with less than 600mm cover are to be protected in accordance with Part H.

13. All pipes, chambers and fittings to be installed, bedded and backfilled in accordance with manufacturers instructions.

14. Pipe which run adjacent to buildings shall be installed in strict accordance with Part H, Clauses 2.23 to 2.25.

15. All drains in the vicinity of existing or proposed trees to be constructed in accordance with the requirements of current NHBC standards.

16. The layout of pipelines, manholes etc. is designed to suit the permanent case. Additional loads over & above those designed for may arise during the construction process. The Contractor shall provide any necessary temporary protection to ensure that pipellines, manholes etc. are not damaged as a result of his method of working.

Rev.	Description	Date.	Drawn	Appr.
A	Filter Chamber detail added	Oct 2013	AA	

• CIVIL • STRUCTURAL • TRANSPORTATION • GEOTECHNICAL • ENVIRONMENTAL

bsp CONSULTING
12 Oxford Street
Nottingham, NG1 5BG
Tel : (0115) 8402227 - Fax : (0115) 8402228
e-mail : info@bsp-consulting.co.uk
Also offices in Derby, Leicester and Sheffield

Drawing Status

PRELIMINARY

Client

Keepmoat

Project Title

Derbyshire Extra Care
Brown Edge Road, Buxton

Drawing Title

Proposed Drainage Details
Sheet 2 of 2

Drawn By: GHB	Checked By: CD	Scale:	As Shown
Project Engineer : CD	Approved By: .	Date:	May 2013

Drawing Number: 12461/246

Revision: A