HPK/2013/0613
13 NOV 2013
BOROUGH COUNCIL

CE

Industrial Wall Fan SAX
Installation and Maintenance Instructions

THESE INSTRUCTIONS MUST BE READ FULLY BEFORE COMMENCING INSTALLATION

Code	Supply	Amps	Watts	r/min	dBA @ 3m
SAX23/9A	230V/1Ph/50Hz	0.20	45	1350	49
SAX23/9AR	230V/1Ph/50Hz	0.20	45	1350	49
SAX23/9ARB	230V/1Ph/50Hz	0.20	45	1350	49
SAX30/12A	230V/1Ph/50Hz	0.39	90	1200	51
SAX30/12AR	230V/1Ph/50Hz	0.39	90	1200	51
SAX30/12ARB	230V/1Ph/50Hz	0.39	90	1200	51

Code	A	B	C	D	E	F	Weight kg
SAX23/9A	340	200	40	-	-	-	5
SAX23/9AR	340	200	40	-	-	-	6
SAX23/9ARB	-	-	-	415	40	240-315	11
SAX30/12A	420	230	40	-	-	-	8
SAX30/12AR	420	230	40	-	-	-	9
SAX30/12ARB	-	-	-	495	40	240-315	15

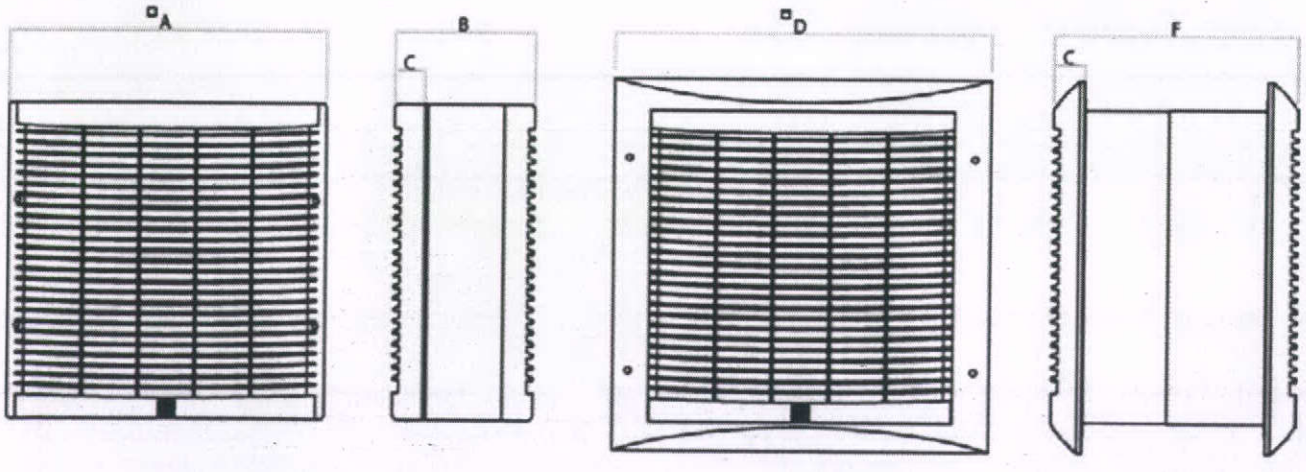

WINDOW TYPE

WALL TYPE

1.0 RANGE

1.1 All versions have delay action, slow moving shutters.
1.2 "A" models can be wired for INTAKE ONLY, EXTRACT ONLY or EXTRACT OR INTAKE (with a double pole three position switch not supplied). Refer to wiring diagrams for connection options.
1.3 "AR" and "ARB" models must be installed with the controller included in the box. Refer to wiring diagrams for connection options. These models have several modes of operation via the supplied controller; Extract (5 speeds), Intake (5 speeds) and Fan stopped with the shutters remaining open.

2.0 GENERAL

2.1 It is important these Installation and Maintenance Instructions are fully adhered to.
2.2 Full details of the unit supplied are shown on the product nameplate. If in doubt about any detail contact Elta Fans Ltd or its agents for clarification.
2.3 All electrical installation must be carried out by suitably qualified and competent personnel in accordance with all current statutory requirements.
2.4 These instructions cover only the Elta Fans Ltd product and do not include the supply or installation of any safety equipment that may be required e.g. adequate guarding or protection from rotating parts and proper electrical isolation.
2.5 Any declarations made by Elta Fans Ltd about product installation and safety, are dependant on the fan equipment being used within installations which themselves meet the requirements of the relevant Standards and Directives of your region.
2.6 The fan is designed for use in an ambient temperature of up to +40°C and up to 95% relative humidity. The fan is not suitable for corrosive or explosive atmospheres.
2.7 The installer should provide easy access to the fan to facilitate future maintenance. The installer should ensure the fan is adequately supported.
2.8 This product is not intended for use by persons (including children) with reduced physical, sensory or mental capabilities, or lack of experience and knowledge, unless they have been given supervision or instruction concerning use of the product by a person responsible for their safety.
2.9 Children should be supervised to ensure that they do not play with the product.

3.0 GENERAL INSTALLATION

3.1 WARNING – The fan must be isolated from the power supply during installation and maintenance. The fan is double insulated and does not require an earth connection.

3.2 Upon receipt, the fan equipment should be visually inspected to check for any damage. Ensure that the impeller is free to rotate.
3.3 If there are any queries concerning the fan equipment, Elta Fans Ltd should be contacted prior to the installation.
3.4 The fan is designed for Window, Wall or In-wall mounting (depending on model) in the desired position to suit the application.
3.5 The fan should be installed at a minimum height of 2.3 m.
3.6 Check the details on the motor rating plate to ensure that the correct power supply (voltage, frequency and phase) is available. An incorrect power supply will lead to permanent damage to the fan motor.
3.7 Refer to the appropriate wiring diagram.
3.8 Means for electrical disconnection must be incorporated in the wiring installation in accordance with the relevant wiring and electrical regulations.
3.9 Precaution must be taken to locate the exhaust discharge terminal so as to avoid the backflow of gases into the room from the open flue of gas or other fuel burning appliances.

4.0 WINDOW MOUNTING INSTALLATION

4.1 Cut a hole as indicated in FIG 1.
4.2 Remove the screws (L) from the front grille (A) to release it from the body of the fan unit (B). (FIG 2)
4.3 Separate the fan body (B) from the inner clamp plate (C). (FIG 3)
4.4 Separate the inner clamp plate (C) from the outer clamp plate (D). Note that the outer clamp plate is shown in the pictures without rear protective grille. It is NOT necessary to divide them. (FIG 4)

4.5 Place the outer clamp plate (D) and the rear grille in the hole made in the glass or partition from the rear and fix it in place using the tabs (E) to hold in place. (FIG 5)
4.6 Place the inner clamp plate (C) on the inside of the glass and screw it to the outer clamp plate (D) using four 60 mm bolts supplied (F). (FIG 6)
4.7 Place the body of the fan unit (B) in position and screw it to the inner clamp plate C using four 30 mm bolts supplied (G). (FIG 7)
4.8 Remove the screws (J) from the connection box cover (I). (FIG 8)
4.9 Remove the cover from the cable entry (H) and carefully cut a suitable hole in it. Thread the connection cable through the hole until it reaches the connection box cover (I) connect the cable to the terminal strip as shown in the corresponding wiring diagram. (FIG 9)
4.10 Position the covers on the cable entry point (H) and the connection box (I) and replace the screws (J). (FIG 10)
4.11 Replace the front grille (A) and fix it in place using the 4 screws (L) previously removed. (FIG 11)

5.0 WALL MOUNTING INSTALLATION

5.1 Cut a hole as indicated in FIG 1.
5.2 Remove the screws (L) from the front grille (A) to release it from the body of the fan unit (B) (FIG 2)
5.3 Separate the fan body (B) from the inner clamp plate (C). (FIG 3)
5.4 Separate the inner clamp plate (C) from the outer clamp plate (D). Note that the outer clamp plate is shown in the pictures without rear protective grille. It is NOT necessary to divide them. (FIG 4)
5.5 Screw the 35 cm long rods (A') into the outer clamp plate (D). (FIG 12)
5.6 Place the outer clamp plate (D) with the rods (A') in the outside part of the hole in the wall, ensuring that the length of the rods protruding from the wall is approximately 20 mm to prevent interference when installing the body of the fan (B). Place the inner clamp plate (C) on the inside of the wall matching up the four (4) interior housings with the rods and then use the nuts to fasten the two plates together. (FIG 13)
5.7 Place the body of the fan unit (B) in position and screw it to the inner clamp plate (C) using four 30 mm bolts supplied (G). (FIG 7)
5.8 Remove the screws (J) from the connection box cover (I). (FIG 8)
5.9 Remove the cover from the cable entry (H) and carefully cut a suitable hole in it. Thread the connection cable through the hole until it reaches the connection box cover (I) connect the cable to the terminal strip (K) as shown in the corresponding wiring diagram. (FIG 9)
5.10 Position the covers on the cable entry point (H) and the connection box (1) and replace the screws (J). (FIG 10)
5.11 Replace the front grille (A) and fix it in place using the 4 screws (L) previously removed. (FIG 11)

6.0 IN- WALL MOUNTING INSTALLATION

6.1 Make a square hole in the wall: 365 mm by 365 mm for 23/9's and 440 mm by 440mm for 30/12's.
6.2 Place the Interior part of the kit (Y) with the circular hole at the top and fix it to wall with plaster, cement, etc., protecting the threaded fixing points in the sides of box (These are used to fit the trim surround). NOTE: the interior part is the smaller one).
6.3 Loosen the screws (L) from the front grille (A) to free it from the body of the fan (B)
6.4 Separate the inner clamp plate (C) from the body of the fan by a turning movement, turn the inner ring by 180°, the fan support (0) has to be placed in the lower part not to interfere with the assembly.
6.5 Fit the inner clamp plate (C) to the KIT body (Y) using four V1 bolts
6.6 Wire the fan as indicated in the fan instructions leaflet, following steps 5.8, 5.9 and 5.10 above
6.7 Place the fan body (B) and screw it to the inner clamp plate (C) using four V1 bolts
6.8 Place the front grille (A) and secure it with the screws (L)
6.9 Fit the interior trim surround (X) and screw it in place using four V2 bolts provided
6.10 Place the Exterior part of the kit (Z) with the circular hole at the top and fix it to the wall with plaster, cement, etc., protecting the threaded fixing points in the sides of the kit. (These are used to fit the trim surround). NOTE: the exterior part is the larger one.
6.11 Dismantle the outer grille (W) from the outer clamp plate loosening the 4 screws.
6.12 The outer clamp plate piece is not used for the wall Built-In Kit.
6.13 Fix the outer grille (W) to the supports of the exterior part of the kit (Z) using the four V3 bolts.
6.14 Fix the exterior trim surround (X) using four V2 bolts

FIXING INSTRUCTION

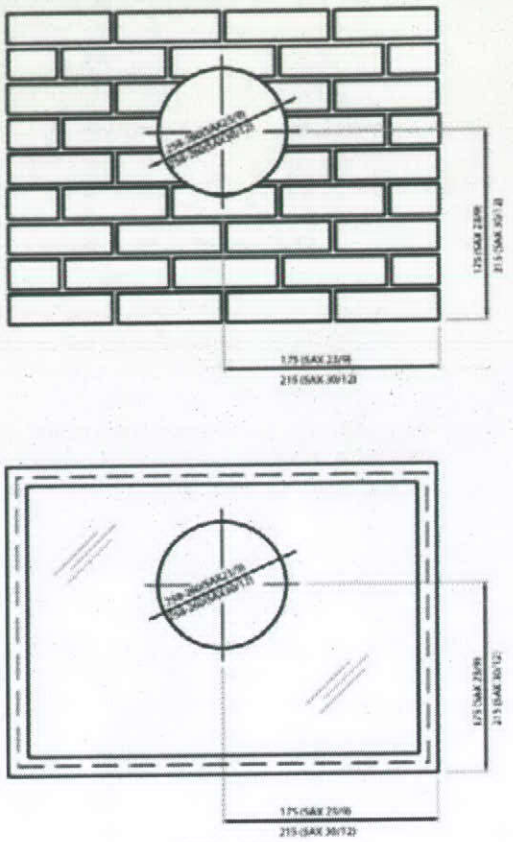

(Fig 1)

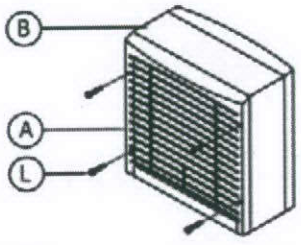

FIG 2

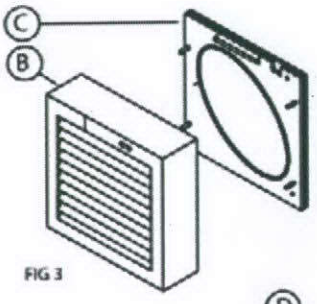

FIG 3

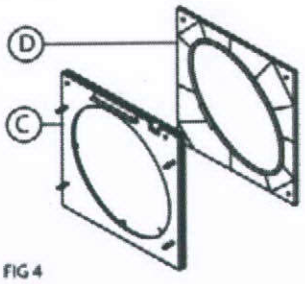

FIG 4

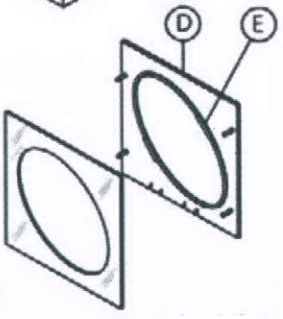

FIG 5

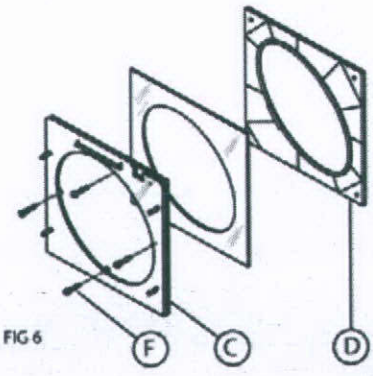

FIG 6

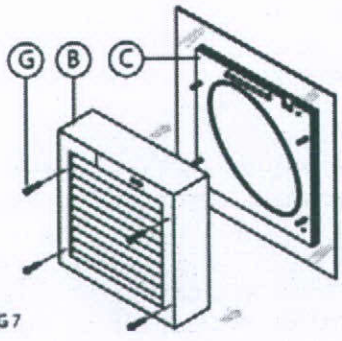

FIG 7

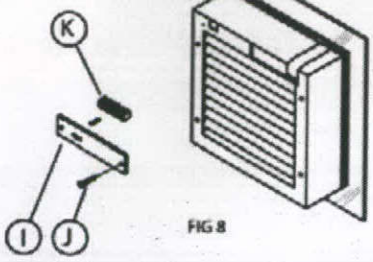

FIG 8

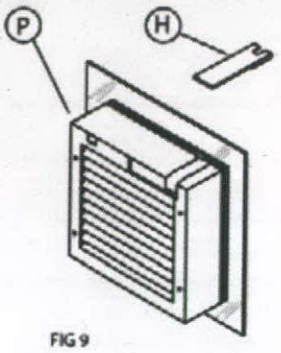

FIG 9

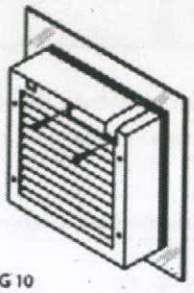
FIG 10

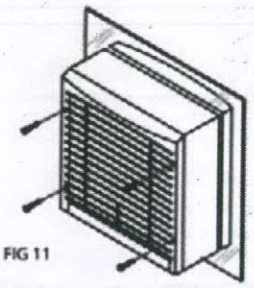
FIG 11

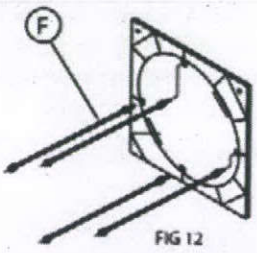

FIG 12

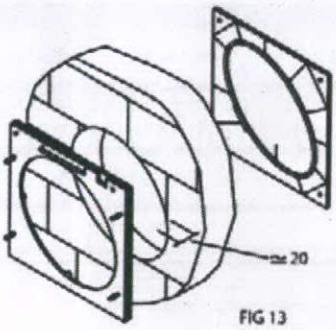

FIG 13

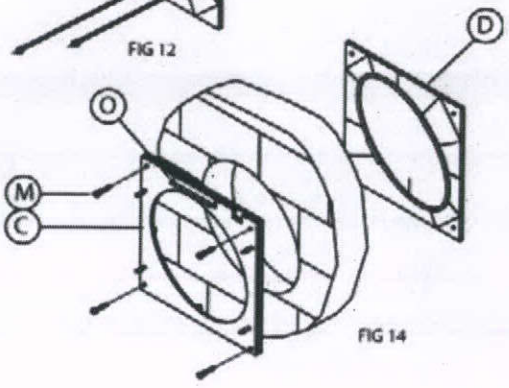

FIG 14

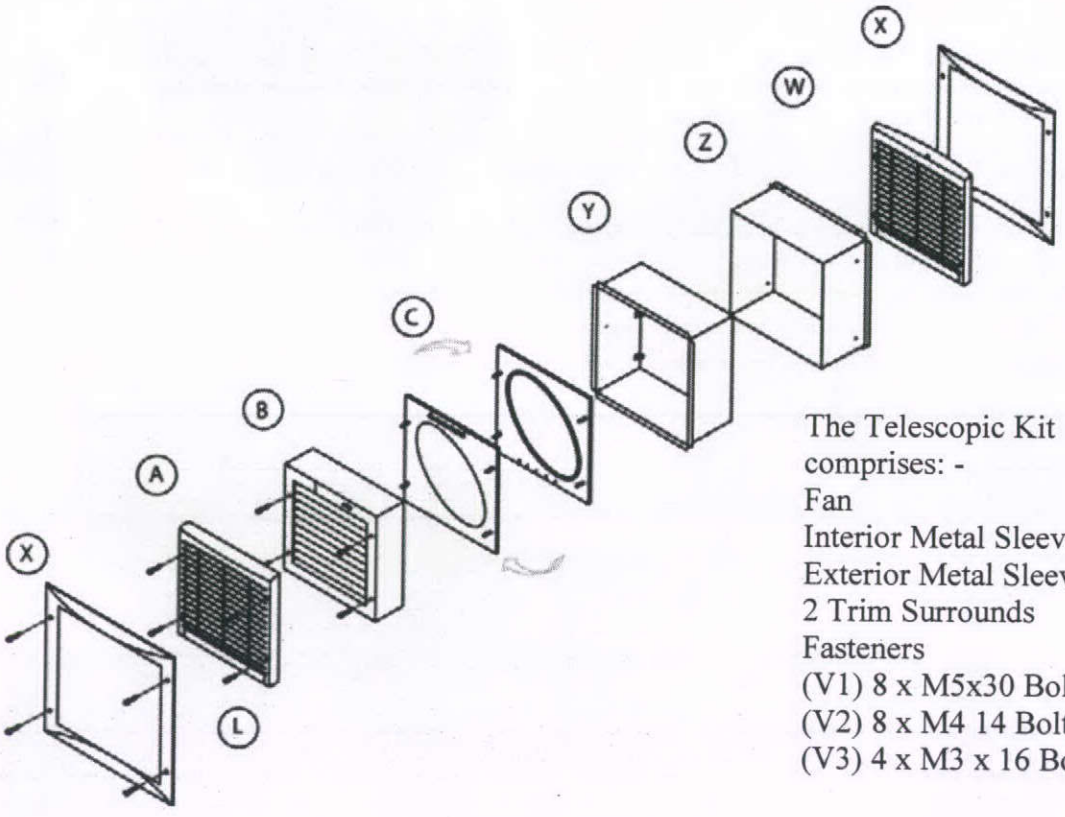

The Telescopic Kit comprises: -
Fan
Interior Metal Sleeve
Exterior Metal Sleeve
2 Trim Surrounds
Fasteners
(V1) 8 x M5x30 Bolts
(V2) 8 x M4 14 Bolts
(V3) 4 x M3 x 16 Bolts

7.0 START-UP

7.1 Before power is supplied to the unit, check that the wiring is correct as per the fan connection diagram.
7.2 At initial start-up, check that impeller rotation and airflow direction is correct.
7.3 Check that the motor amperage draw does not exceed the nameplate rating.

8.0 FAN MAINTENANCE

8.1 Inspection of the fan at least once every 12 months is recommended to ensure that the motor, fan blades, and supporting guards, are clean. Any build up of dust and deposits on the blades or guards should be removed using a non-abrasive cleaner.
8.2 All fastenings should be checked for tightness. In addition, all rotating items should be checked.
8.3 Bearings are of the 'sealed for life' type and will not need a detailed inspection.

9.0 WIRING

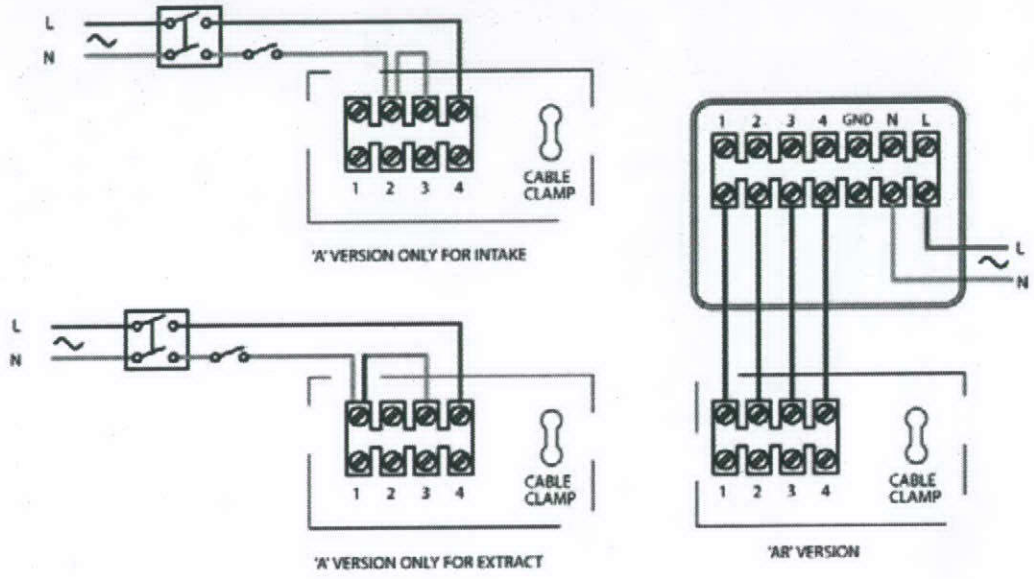

GUARANTEE

Elta Fans Ltd will, free of charge, within a period of 2 years from the date of despatch from their works, repair or at its option replace any goods which are proved to have defects as a result of defective materials or workmanship. The goods MUST be returned to Elta Fans Ltd carriage paid for examination.

Elta Fans Ltd

17 Barnes Wallis Road
Segensworth East Industrial Estate
Fareham, Hampshire, PO15 5ST, United Kingdom

Visit: eltafans.com
e-mail: mailbox@eltafans.co.uk

Applied Technology:	**Tel:** +44(0) 1489 566500	**Fax:** +44(0) 1489 566555
Building Services:	**Tel:** +44(0) 1384 275800	**Fax:** +44(0) 1384 275810
Export:	**Tel:** +44(0) 1489 566500	**Fax:** +44(0) 1489 566555

SAX Inst Issue 1: 27-03-08