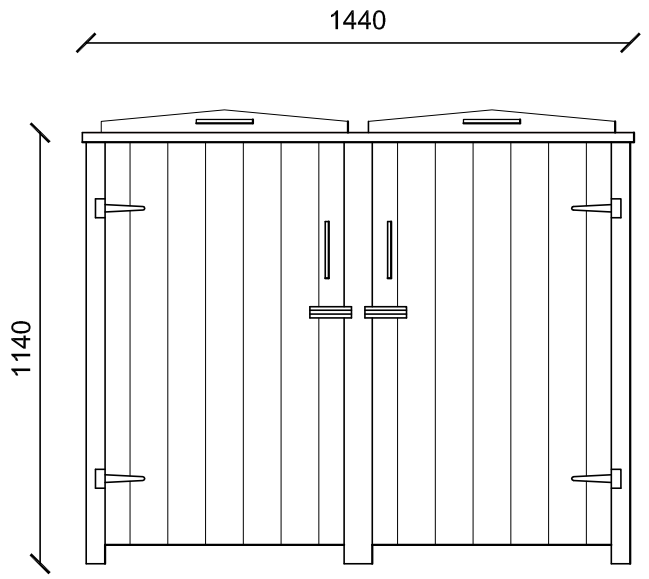

Front Elevation

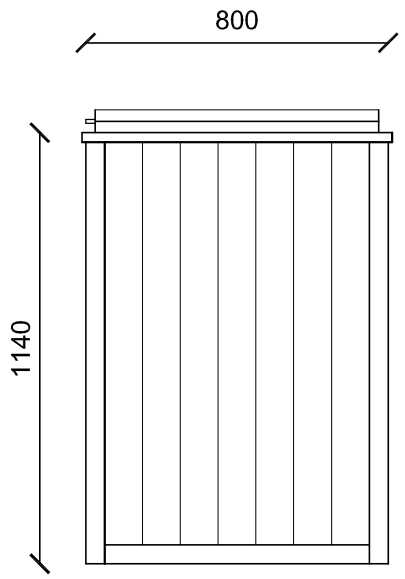

Side Elevation

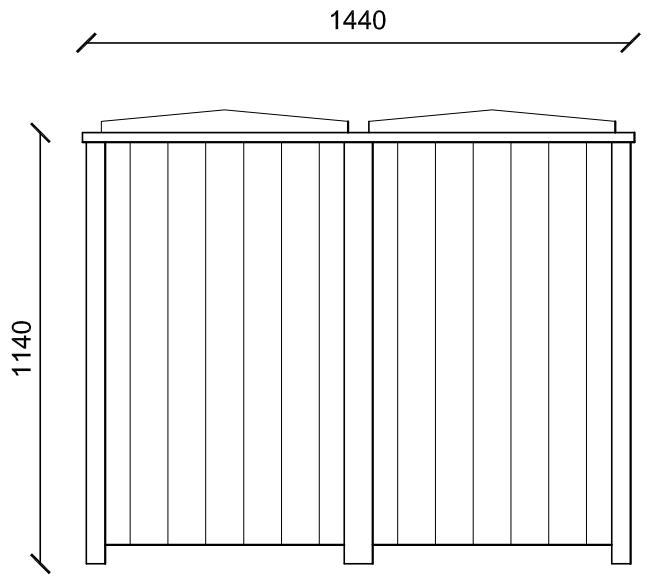

Rear Elevation

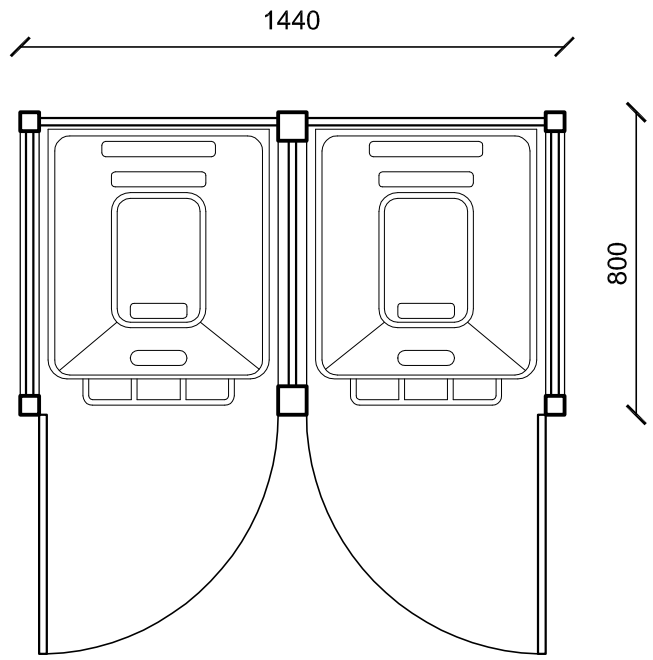

Plan



Double Wheelie Bin Chest

Chest to store 2 no. 240 litre wheelie bins. Timber tongue and groove panelled, with lockable doors and lift up lid for easy access.

HIGH PEAK **ARCHITECTS** LTD

2nd Floor, Wharf House, Wharf Road, Whaley Bridge, High Peak, Derbys SK23 7AD

Tel: 01663 719717 Web: www.highpeakarch.com Email: hpa@highpeakarch.com

Conversion to Flats

Crown and Mitre, New Smithy

Bin Store Details

1164.05

Scale: 1:20 @ A3 Date: September 2013 DO NOT SCALE OFF THIS DRAWING Rev: