Details of Proposed Cycle Stores



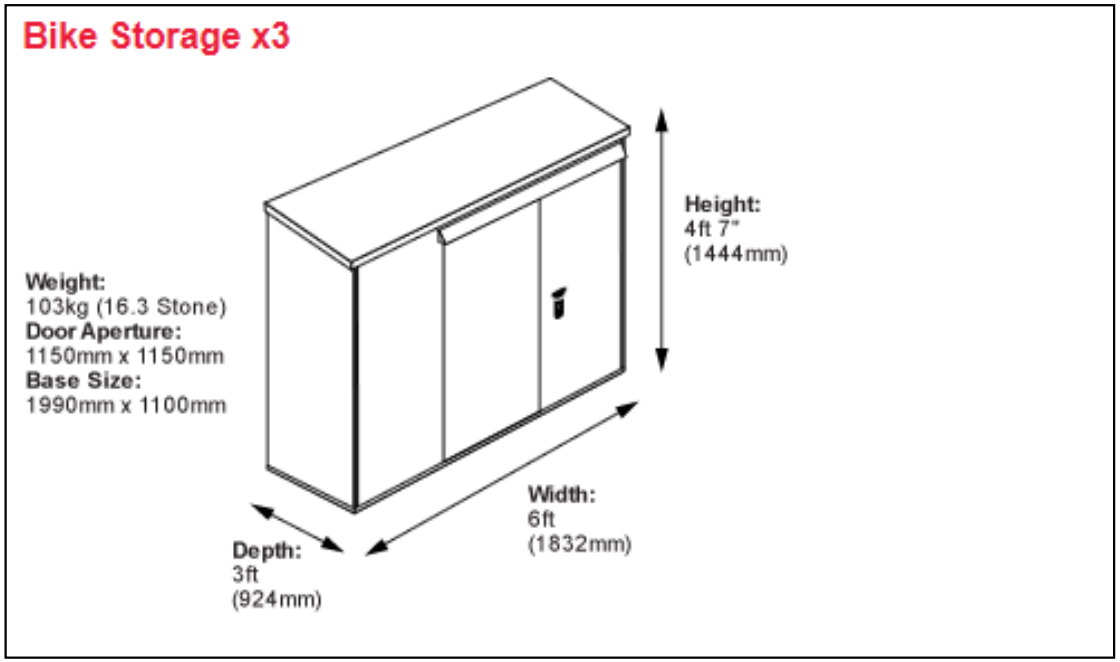

- The Metal Bike Shed is made from strong, thick, galvanised steel.
- At 103kg in weight (that's 16.2 stone), the Addition bike store is a substantial all metal unit suitable for everyday use.
- Supplied with a 10 Year Warranty - a quality product built to last.
- A unique shed ventilation system around the unit minimizes the build up of condensation inside the unit - keeping your equipment dry and safe.
- Fitted with a tough three point shed locking system
- Offering excellent bike security as seen in this clip.
- Pick resistant Euro cylinder lock - an Excellent shed locking system.
- Large double door access - making it easy to wheel bikes in and out.
- Door handing can be changed by the user to suit location (Choose a right handed or left handed door).
- Integral rain guard - Keeps even the strongest wind and rain out.
- Integral metal base - complete with free fixings for securing the bike shed to your concrete base.

Details from http://www.asgardsss.co.uk/home-category-2/bike-storage-x3