DESIGN AND ACCESS STATEMENT: PLANNING APPLICATION FOR RETENTION OF SECURITY FENCING, WHARF ROAD, WHALEY BRIDGE

The application relates to security fencing installed at Wharf Road, Whaley Bridge a plot of land relating to the activities of our now dormant sister company Plants of Whaley Bridge Limited and until recently used as our primary base of operations. A number of residential properties have an easement across a portion of this land.

The site is an industrial site of limited economic use and has been refused planning permission for alternative uses in the past. Chemquip occupied it for a period to ensure a presence on the site to deter the unwanted attention it has received recently but the limitations of the site were hampering the economic potential of the company hence we were forced to move to a more suitable location.

In order to secure the land from continued dumping, vandalism and theft we have installed security fencing on either side of the easement as it passes through our land.

It was our understanding such an easement did not constitute a “highway” hence planning permission would not be required.

After receiving a number of complaints the LPA contacted us and informed us planning permission would be required or the fence removed. The need to secure the site is still very much necessary hence the submission of this retrospective application.

The fencing is made up of 2.4m high dark green chain-link fencing [for more details see appendix 1] on the side nearest the railway embankment which had soft ground in which posts would be set and standard Heras Ready fence system [for more details see appendix 2] along the line of the previous concrete fence post system on the other side where the ground is solid concrete.

On the other side of the site as you exit the railway tunnel we have installed chain link fencing next to the building as the public footpath passes in front and through the tunnel in the middle of the building. We have also erected 2.4m chain link fencing to cover the entrance to the rear courtyard area and would like permission to continue this up either side of the staircase to reservoir road to fully secure the site.

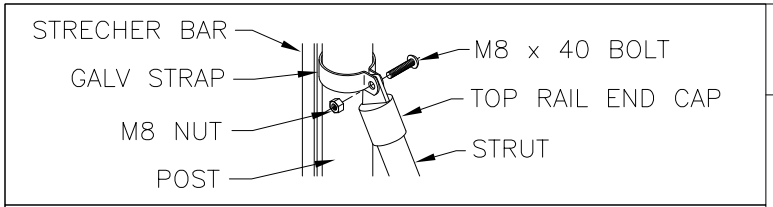

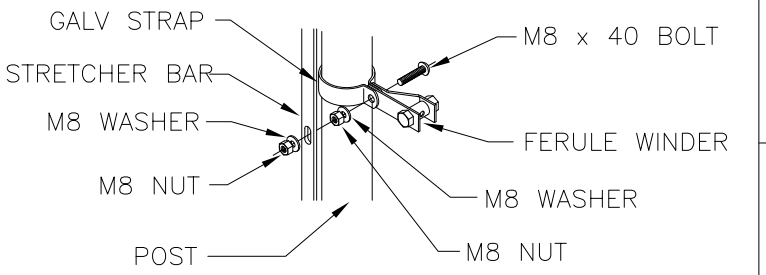

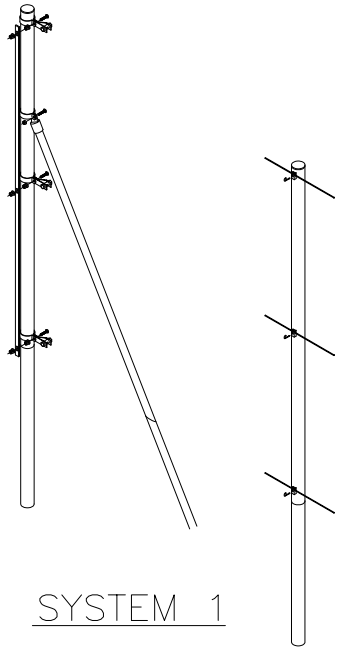

SYSTEM 1

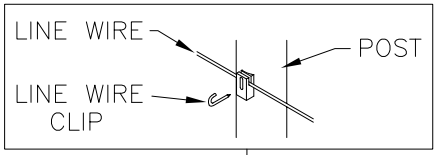

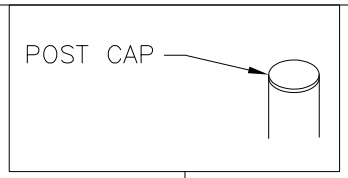

FENCE HEIGHT	No. LINE WIRES
0.9m	2
1.2m – 1.8m	3

APPENDIX 1

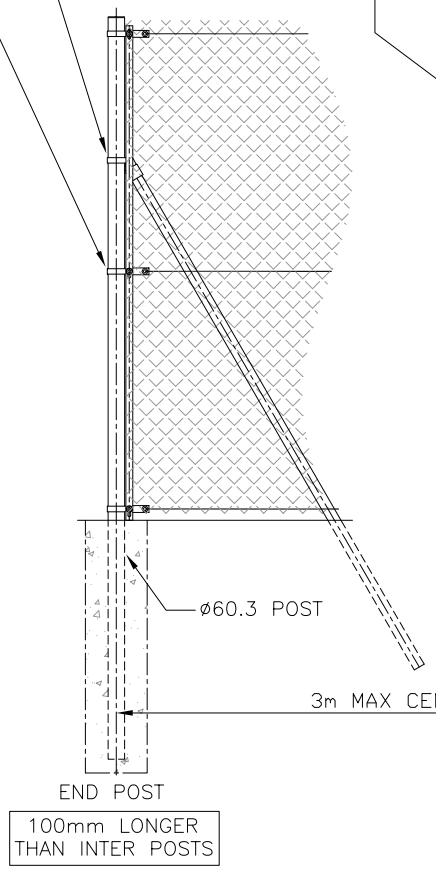

END POST

100mm LONGER THAN INTER POSTS

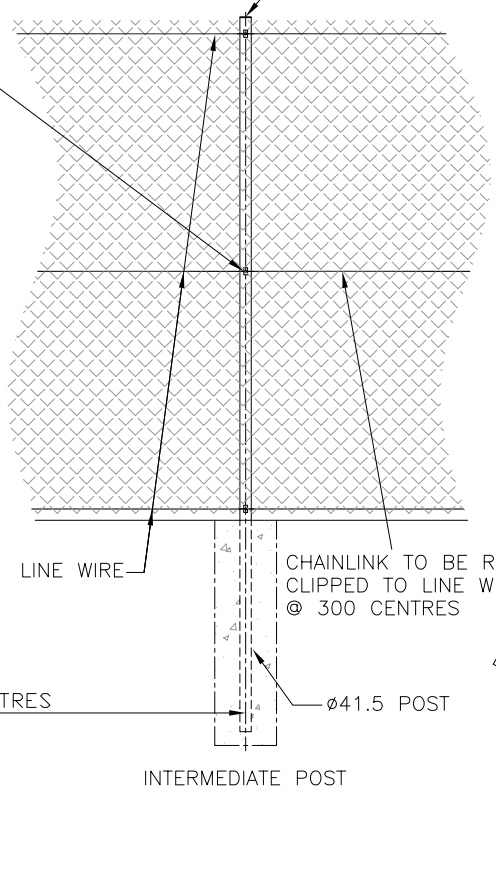

INTERMEDIATE POST

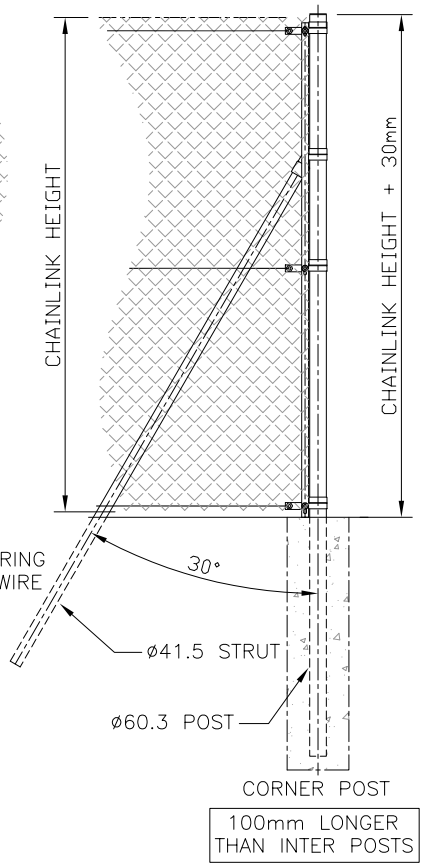

CORNER POST

100mm LONGER THAN INTER POSTS

NOTES
ALL DIMENSIONS ARE IN mm (UNO)

INTERMEDIATE STRAINER POSTS TO BE USED ON STRAIGHT RUNS OVER 100m

DO NOT SCALE – IF IN DOUBT ASK

THIS DRAWING IS TO BE USED IN CONJUNCTION WITH INSTALLATION INSTRUCTIONS ON OUR WEBSITE: WWW.JACKSONS-FENCING.CO.UK

Jacksons
FINE FENCING
Stowting Common
Near Ashford,
KENT. TN25 6BN
Telephone : 01233 750393
Fax: 01233 750403
Int. Tel : +44 (0)1233 750393

This Drawing Is The Property Of H.S. Jackson & Son (Fencing) Ltd.
And May Not Be Copied Or Reproduced In Any Way Without Prior Written Permission.

5	26/04/10	INT. STRAINERS UP TO 100m
4	22/09/09	ENDS 100mm LONGER
3	16/09/09	UPDATED
2	29/09/03	OFFSET STRAPS DELETED
1	19/09/01	Thrust Plates Removed.
0	30/11/98	ORIGINAL ISSUE

Drawn Y HALL
Date 30/11/98
Checked
Size A3
Scale N.T.S U.O.S

TITLE
Tubular Chainlink
SYSTEM 1 (MEDIUM)

CUSTOMER

ACK No.

Drawing No.
98 J2/01021
Sheet 1 of 2

APPENDIX 2

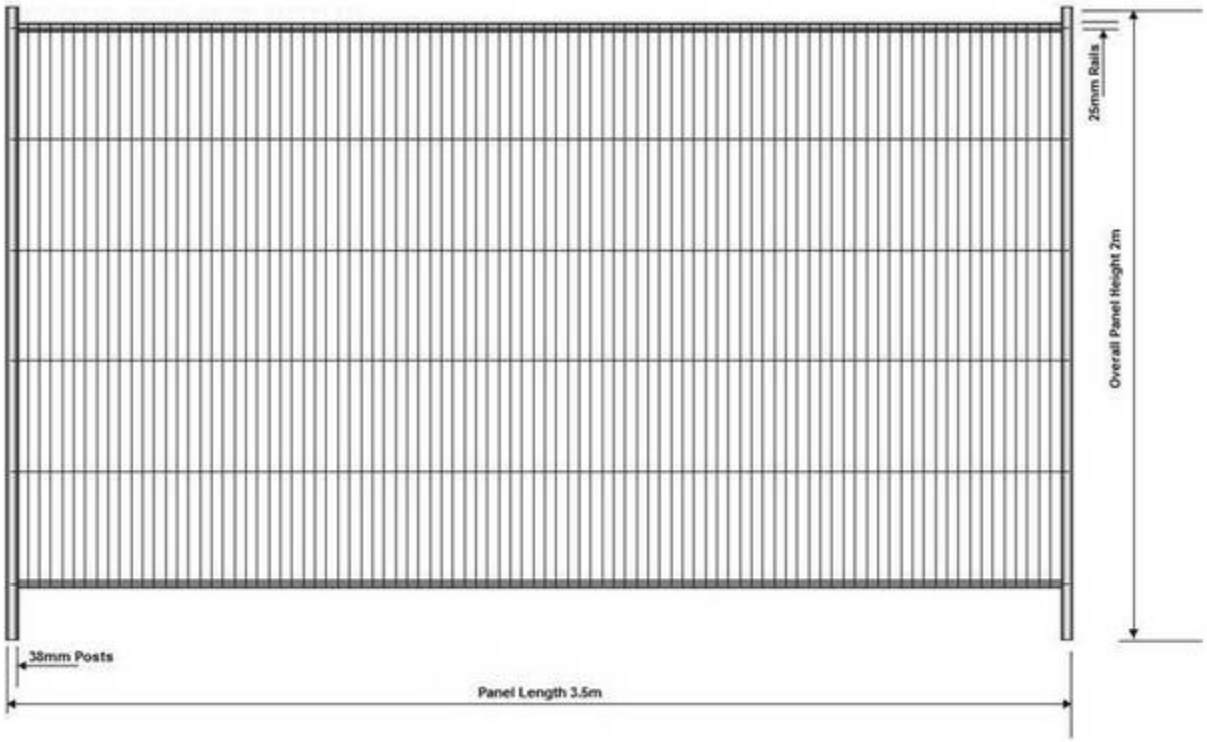
25mm Rails
Overall Panel Height 2m
38mm Posts
Panel Length 3.5m

