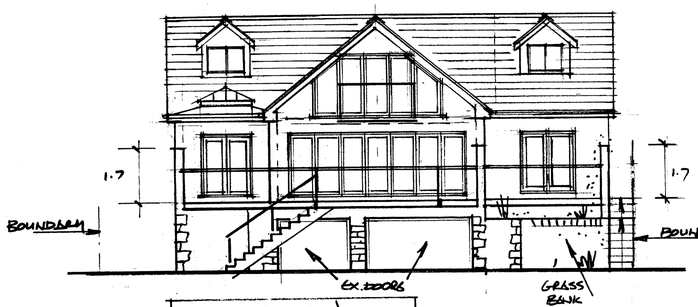

REAR ELEVATION \ SOUTH

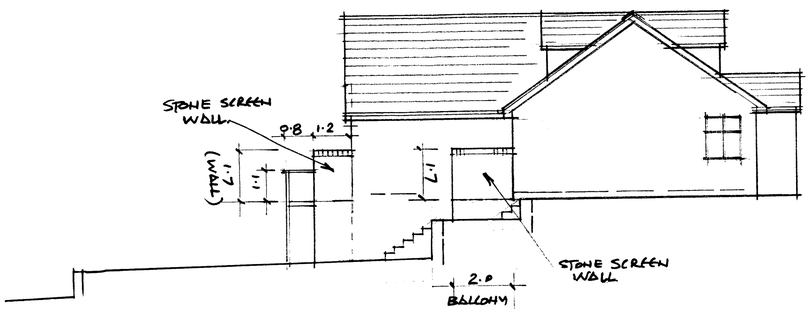

SIDE ELEVATION \ EAST.



FRONT ELEVATION \ NORTH.

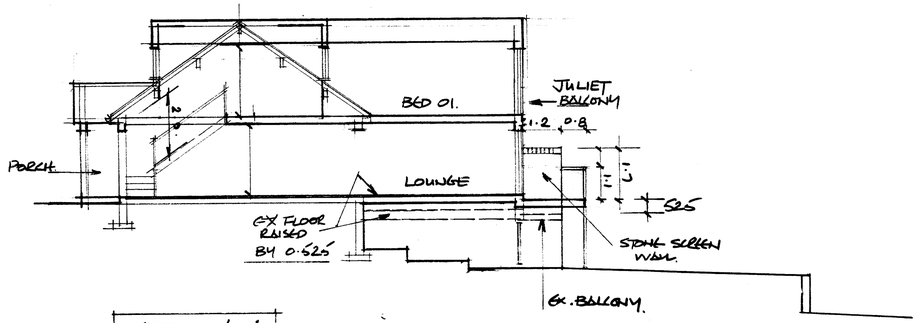

SECTION A-A

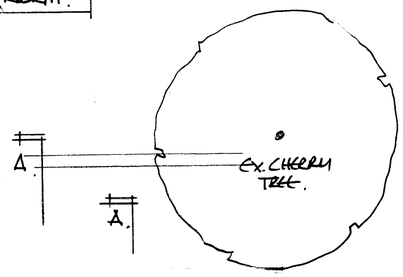

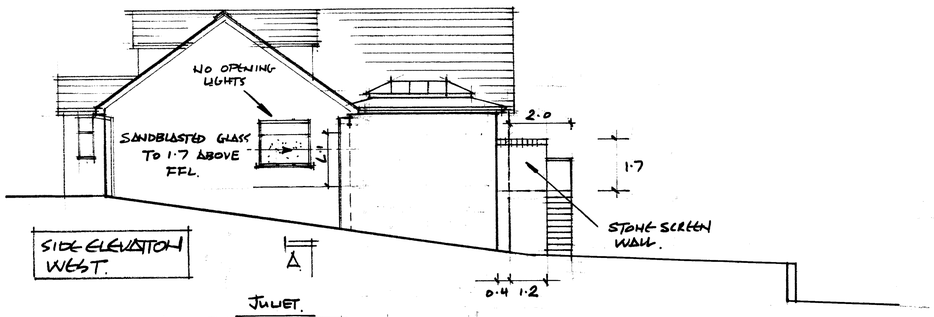

SIDE ELEVATION WEST.

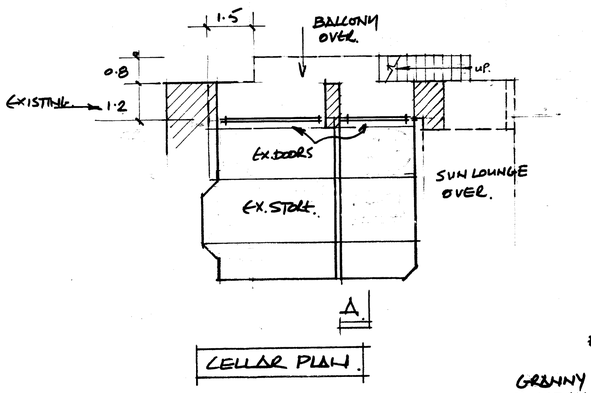

CELLAR PLAN.

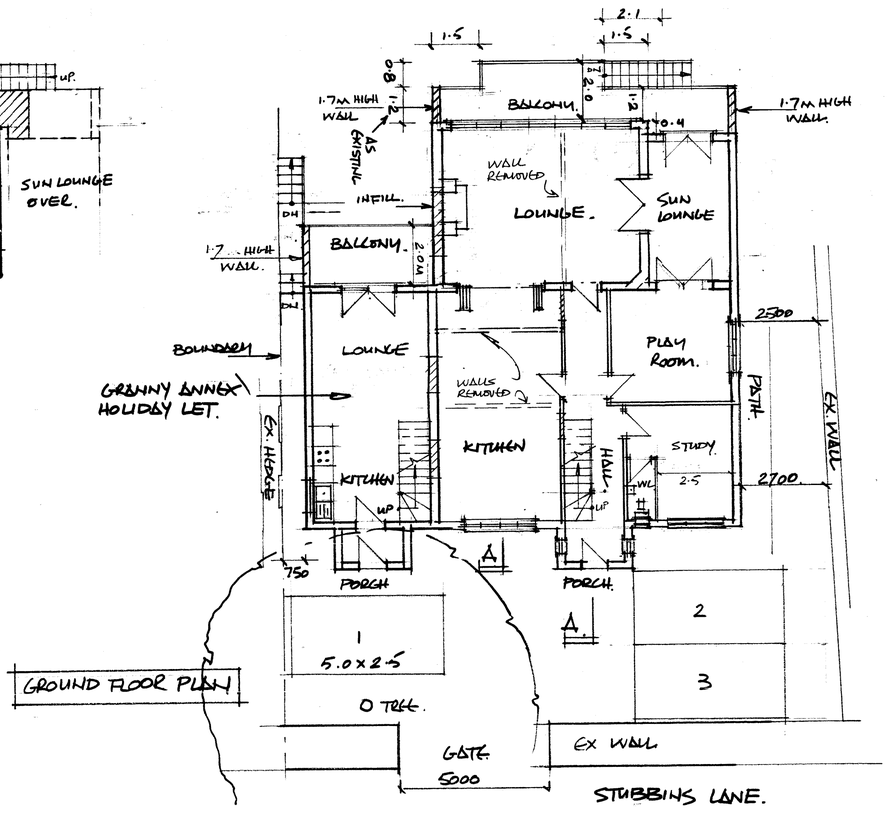

GROUND FLOOR PLAN

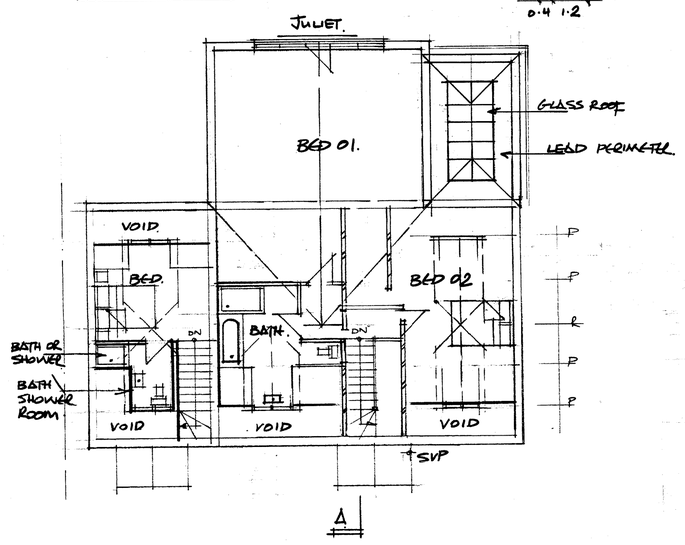

LOFT PLAN.

NOTES.

1. ~~EXISTING~~ OUTER LEAF TO BUNGALOW (WITH ~~PEBBLE~~ DASH FINISH) TO BE REMOVED AND REPLACED WITH RANDOM COURSED NATURAL STONE.
2. SAMPLE PANEL TO BE PROVIDED.

CLIENT:	MR+MRS MORRISON.
PROJECT:	ASHLEA STUBBINS LANE CHINLEY
TITLE:	PROPOSALS

A P DESIGN
ARCHITECTS AND PLANNING CONSULTANTS
4 KINDER VIEW, NEW MILLS, HIGH PEAK SK22 4DB
TEL 01663 747777

SCALE	DRAWING NO	REV
1:100	03	D