TYPE 3:
W7,W8,W9, W15 partial, W16

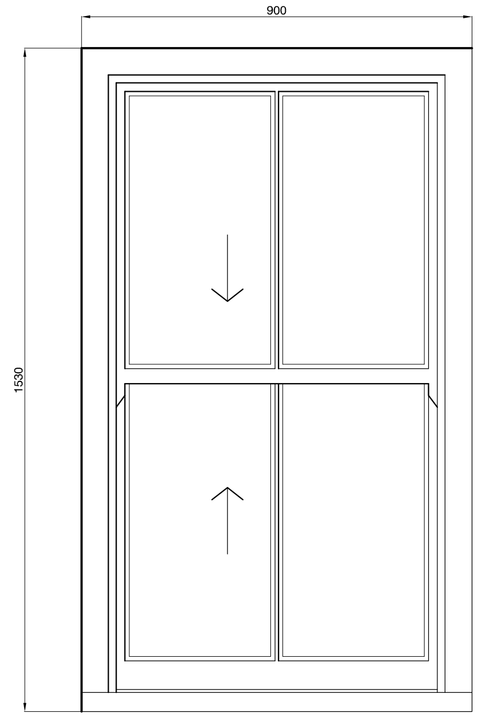

W7

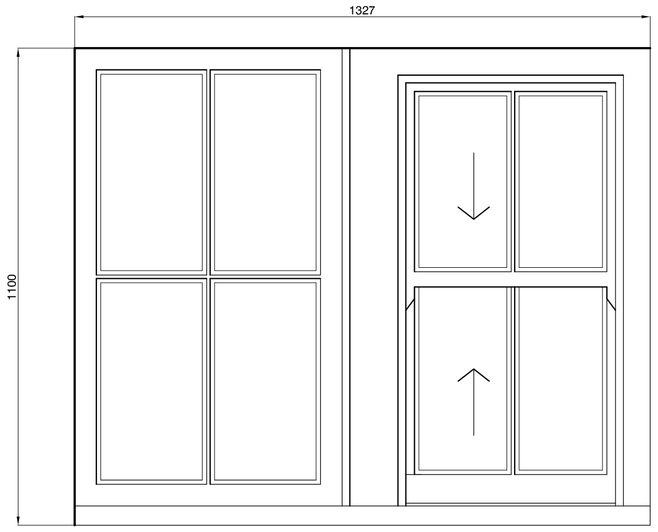

W15

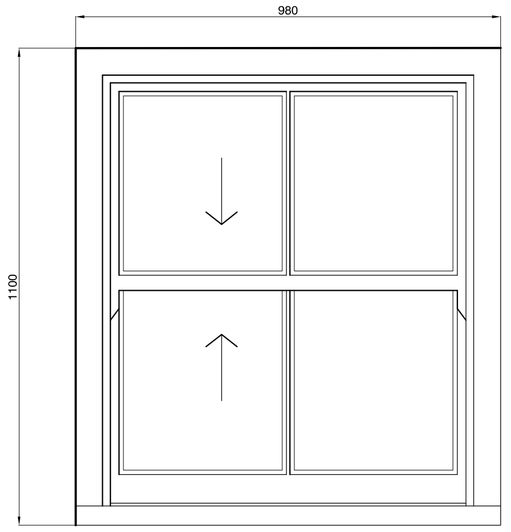

W16

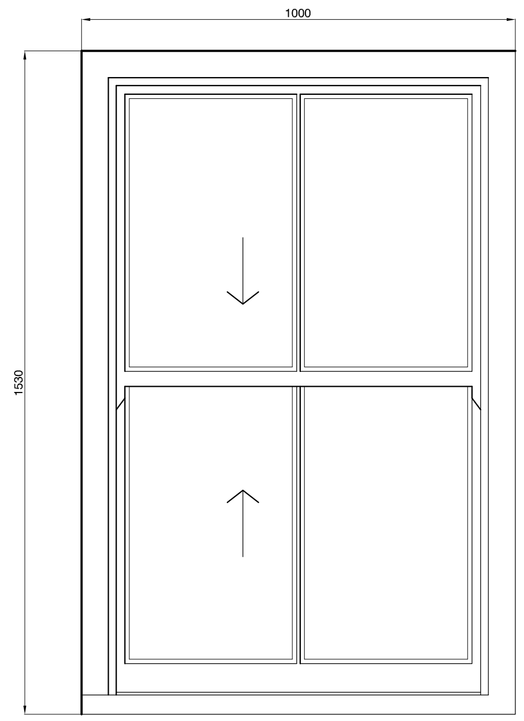

W8

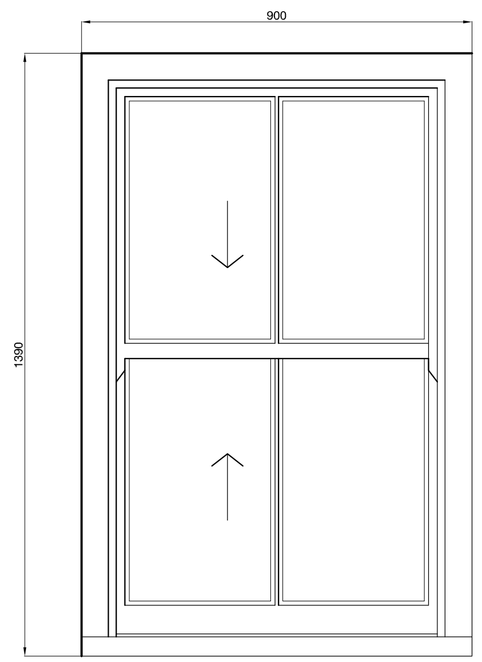

W9

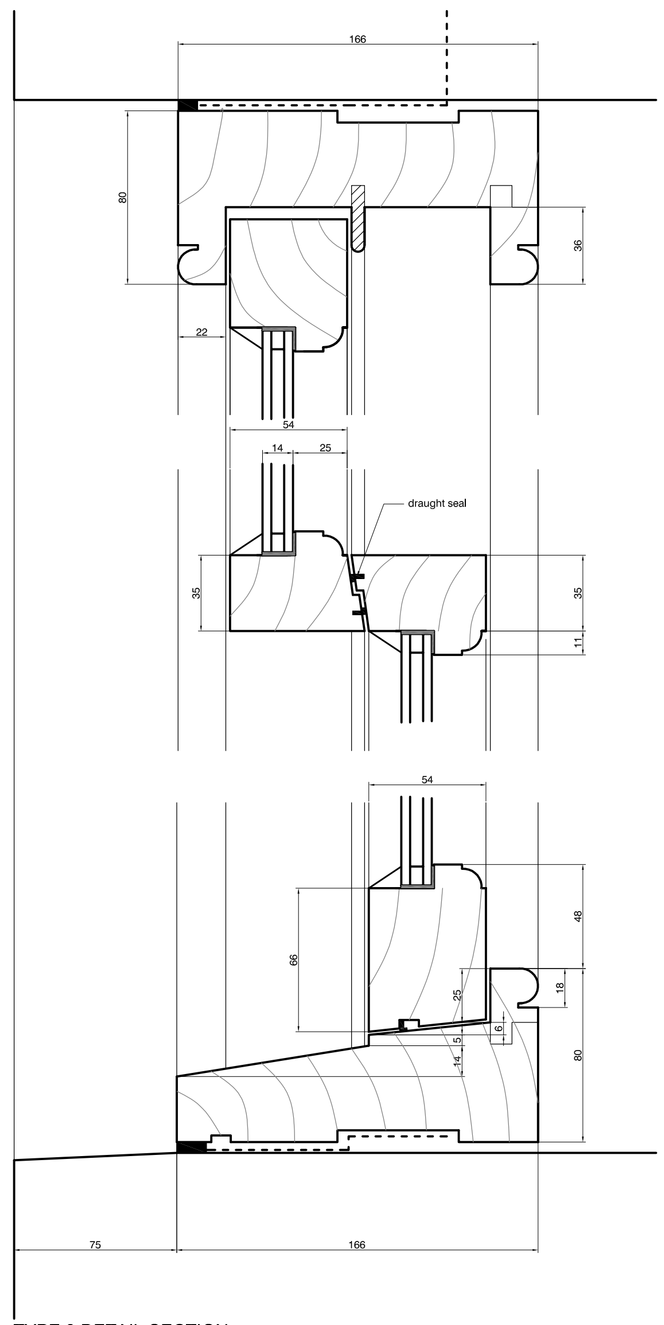

TYPE 3 DETAIL SECTION

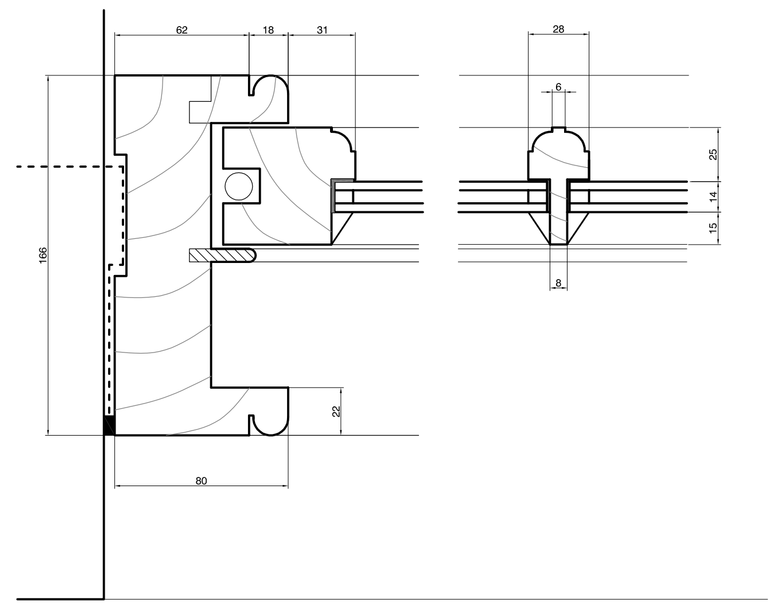

TYPE 3 TYPICAL JAMB DETAIL

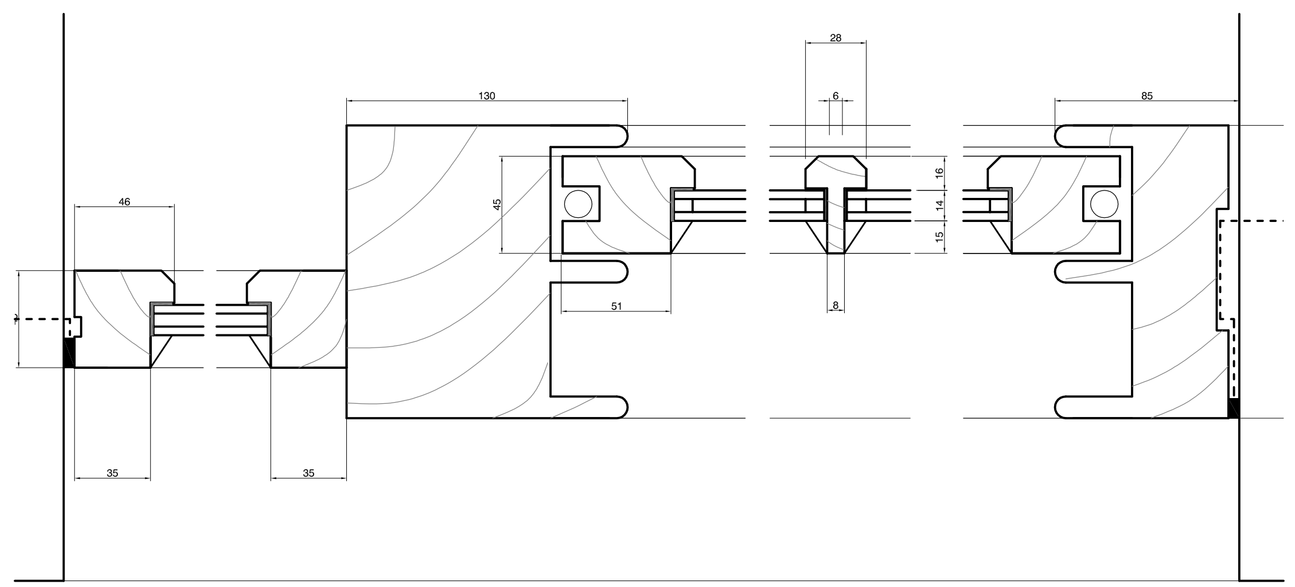

TYPE 3 JAMB DETAIL W15 AND W16

TYPE 4:
W5,W6,W15(partial)

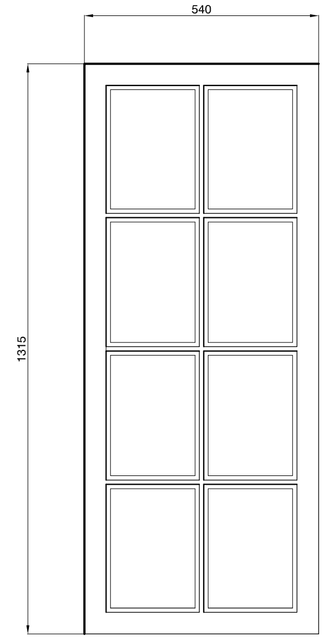

W5

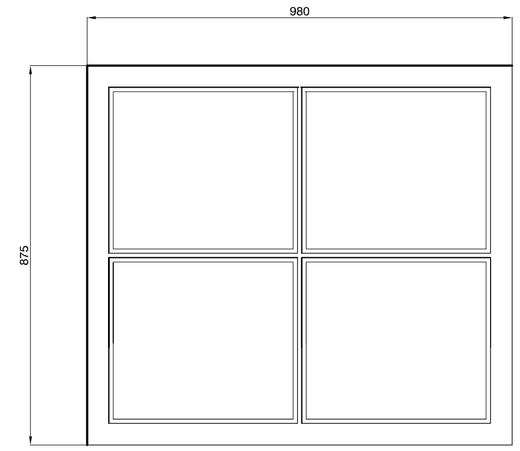

W6

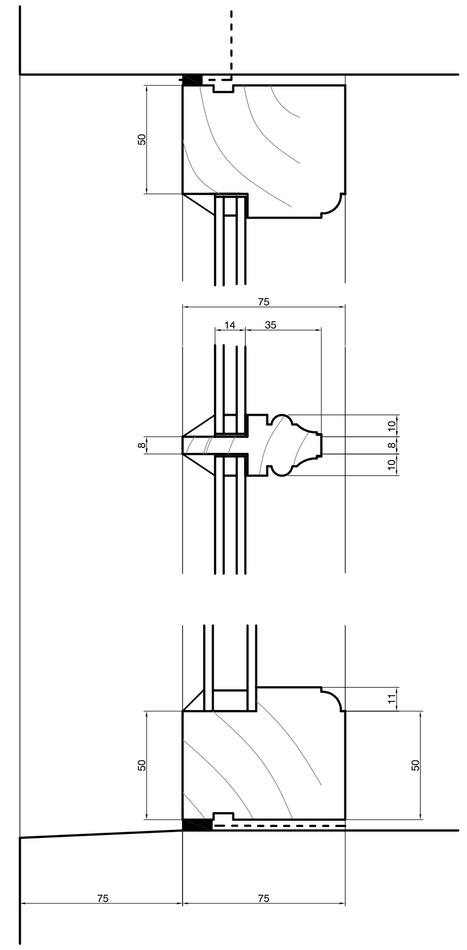

TYPE 4 DETAIL SECTION

NOTES:

Opening sizes relate to existing internal opening dimensions. 15mm has been added to all vertical heights. Internal finished not shown on details. All structural openings to be checked by manufacturer prior to manufacture.

Casement windows to have stormproof hinges, weatherseals (white), locking with night vent facility.

All windows to be double glazed to achieve a minimum of 1.6W/m2k unless stated otherwise.

All windows to be hardwood (marante or similar hardwood from FSC source), primed in the factory. If full factory glazed allow finish of 3 coats microporus paint.

Bituminous felt dpc and mastic sealant to heads, jambs and cills of all external openings (min 150 girth) pinned forward to all window and door openings. Location of dpc on dwgs indicitive only - to be agreed on site once existing window / door removed.

Ensure all existing cills fall away from the window.

Toughened safety glazing to all glazing in windows below 800mm above finished floor level.

Detail and weathersealing to be advised by window manufacturer and detail agreed with Conservation Officer,

WINDOW TYPES

~~TYPE 1 - FIXED LIGHT CASEMENT~~	~~W1~~
~~TYPE 2 - FIXED AND OPENING CASEMENTS IN GROUPS OF 3 OR 5 WITH STONE MULLIONS BETWEEN~~	~~W3,W11,W17,W18,W19,W20~~
TYPE 3 - SLIDING SASH	W7,W8,W9,W15(partial),W16
TYPE 4 - FIXED SASH	W5,W6,W15(partial)
TYPE 5 - CASEMENTS WITH 2 LIGHTS	W12,W13,W14
~~TYPE 6 - SPECIALS~~	~~W2, W4~~

Rev B: 18.02.13 Slimline glazing units as Conservation Officer agreed detail, Type 3, 4 and 5 (not W13) issued for planning
Rev A: 12.06.12 Glazing bars added to W5, glazing bar detail adjusted

HIGH PEAK **ARCHITECTS** LTD
2nd Floor, Wharf House, Wharf Road, Whaley Bridge, High Peak, Derbys SK23 7AD
Tel: 01663 719717 Website: highpeakarch.com Email: hpa@highpeakarch.com

Replacement windows and doors **Window Schedule and details 2**

Marsh Hall Farm, Marsh Hall Lane 1123.03

Scale: 1:10 and 1:2 detail Date: May 2012 DO NOT SCALE OFF THIS DRAWING Rev: B