

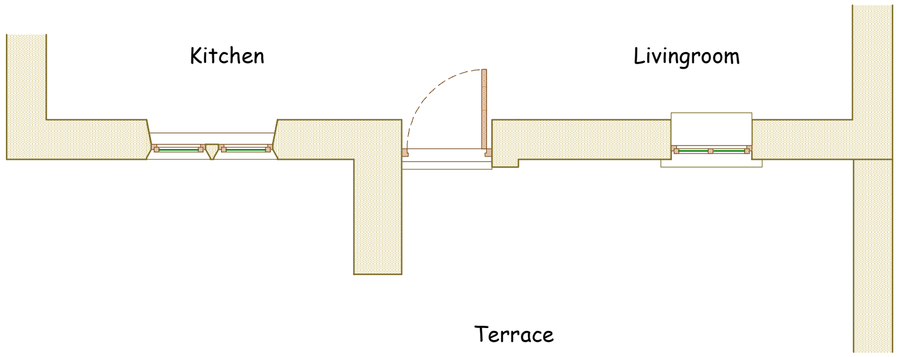



GROUND FLOOR PLAN

0 1000 2000 3000
Scale

A2

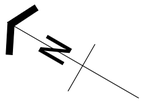

NOTES:

Randfield Associates take no responsibility for any dimensions obtained by scaling from this drawing. If no dimension is shown the recipient must ascertain the dimension specifically from the Architect or by site measurement. Supplying this drawing in digital form is solely for convenience and no reliance may be placed on digital data. All data must be checked against hard copy. Dimensions must be checked on site. Any discrepancies must be reported to the Architect immediately. This drawing is copyright of Randfield Associates.

REV:	BY:	DESCRIPTION:	DATE:
:	:	:	:
:	:	:	:
:	:	:	:
:	:	:	:
:	:	:	:
:	:	:	:

RANDFIELD associates
Saunders : King : Moran
CHARTERED ARCHITECTS
Forge Bank Studio
1a Longhurst Lane Marple Bridge Stockport SK6 5AE
Tel: 0161 427 8485 Fax: 0161 427 5770
e-mail: info@randfieldassociates.co.uk
web: www.randfieldassociates.co.uk
Planning & Design Consultants : Interior Design : Building Inspections & Surveys : Historic & Listed Building Specialists

Client: Mr and Mrs Dale		
Job: Flag Fields Barn Hague Road Glossop SK13 8NS Proposed Verandah		
Drawing: EXISTING PLANS		
Scale: 1:50	Date: Oct 2012	Drawn: CAB
Job No: 3048	Dwg No: 03	Rev: -