CURRENT 8050 -ATM BLOCKS

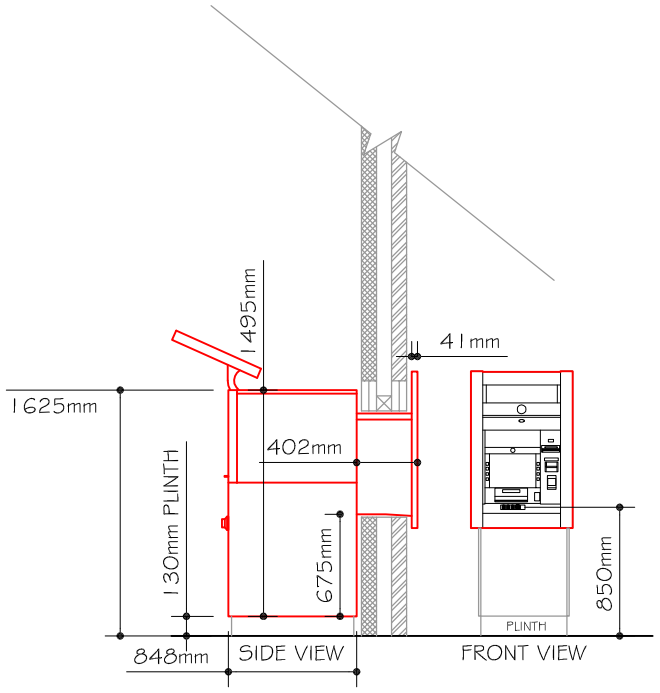

EXAMPLE SECTION
(KEYPAD HEIGHT SHOULD BE BETWEEN
850mm - 1000mm)

'TYPICAL STYLE FOR
ILLUSTRATION ONLY'

SCALE 1 : 50

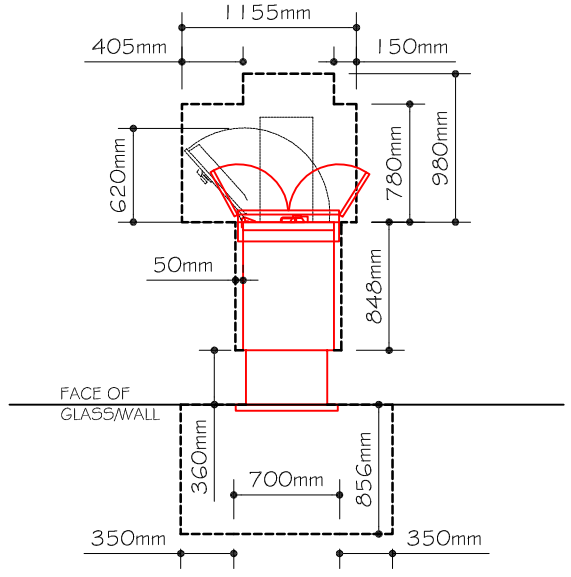

PLAN - CURRENT

SCALE 1 : 50

TYPE C

EXTERNAL ATM
REF: PO - L1
780mm X 1275mm
WITH ILLUMINATED SIGNAGE
SURROUND @ 150 Lux OR 48 cd/m
('FREE CASH WITHDRAWALS'
IS BACK LIT)

THE BODY OF THE SURROUND IS CONSTRUCTED FROM 19MM FOAMEX WITH A LAMINATED VINYL COVERING, THE LED PANEL IS CONSTRUCTED FROM 6MM PERSPEX.

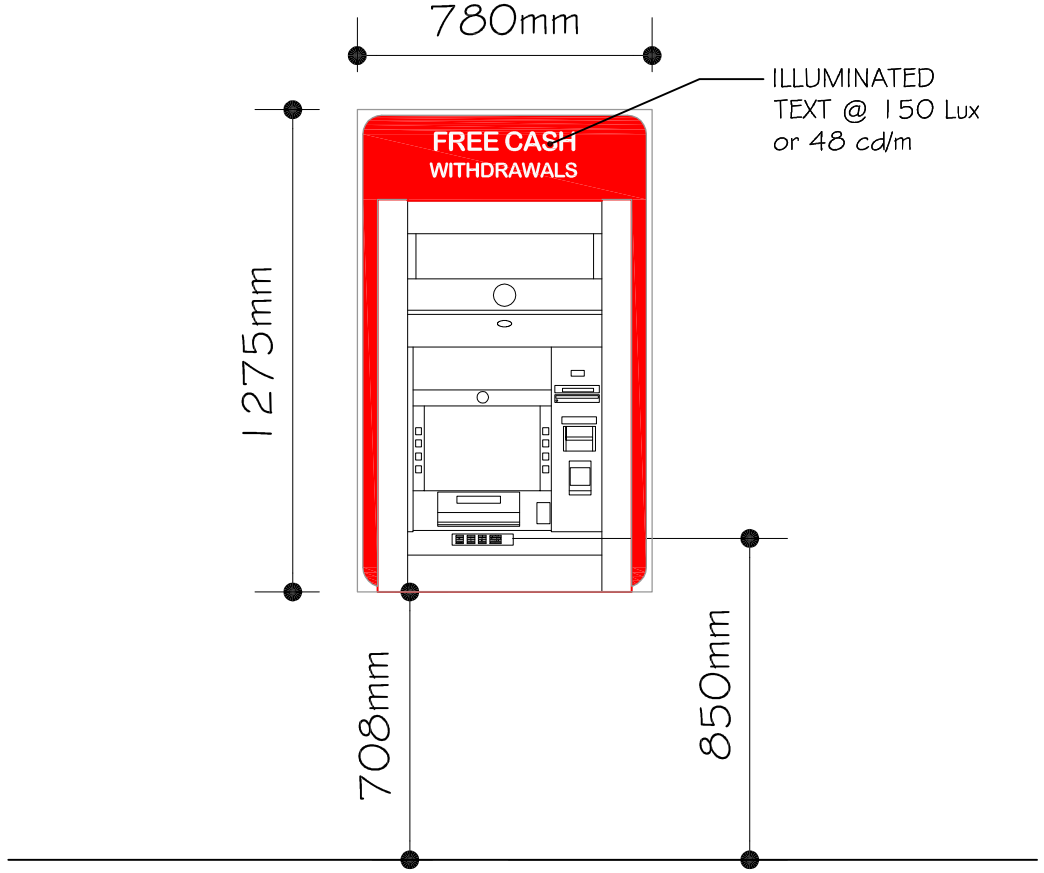

TYPE C OPTION 1

SCALE 1 : 20

This drawing is copyright & the property of EC Harris & must not be copied in whole or in part without their written permission. Copyright is reserved. ©

FOR PLANNING USE ONLY

The Contractor is to report all dimensional discrepancies & errors to the Contract Administrator prior to construction commencing.
It is essential that this drawing is read in conjunction with all specifications/ schedule of works & that all works are included for.

SAFETY HEALTH AND ENVIRONMENTAL (SHE) INFORMATION

Based upon the assumption that all works will be undertaken by competent contractors working, where appropriate, to approved method statements, the designer would draw the reader's attention to the **significant** residual SHE risks that have not been eliminated from the designs shown on this drawing by the design process.

CONSTRUCTION, OCCUPANCY AND DEMOLITION

(List below the significant residual risks for EACH of these three phases of operation).

Where the designer determines that, so far as is reasonably practicable, there are no foreseeable significant residual design risks associated with that phase of operation the statement "NO FORESEEABLE SIGNIFICANT RESIDUAL DESIGN RISKS IDENTIFIED" shall be displayed (no section shall be left blank).

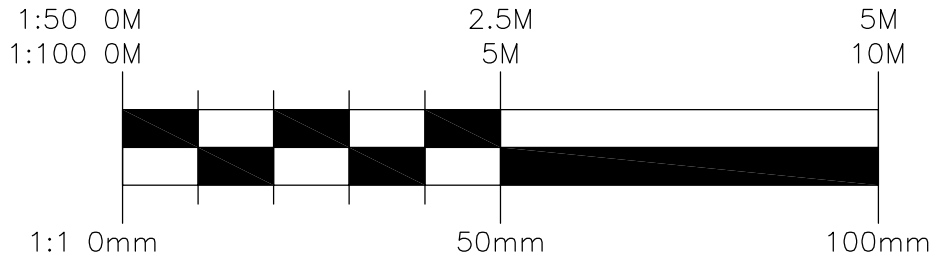

Rev No.	Comments	Date

Client
BANK OF IRELAND

Project title
OFFSITE ATM SURVEYS
ATM EXAMPLES

Drawing title
POST OFFICE ATM INSTALLATIONS
ATM EXAMPLE TYPE C

Drawing status

Job No.	Project co-ordinator
15961100	
Scale	**Date**
AS STATED @ A3	13.07.2012
Drawn by	**Checked by**
RA	XX
Dwg. No.	**Rev. No.**
EXA/03	

EC HARRIS
BUILT ASSET
CONSULTANCY

EC HARRIS LLP
Midsummer Court, 314 Midsummer Boulevard,
Milton Keynes. MK9 2UB
Tel: 01908 423395 Fax: 01908 440011
information@echarris.com
www.echarris.com

An ARCADIS company

P:\CAD Files\205-0344 BOIATMs\##NEW SITES##\4.0 Planning\ATM DETAILS\ATM EXAMPLES TYPE ABCD.dwg