HPK/2012/0567

02 NOV 2012

Outerframes - 70mm Sculptured

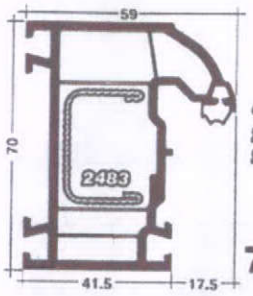

2482 Steel
2251 Alu.

70010

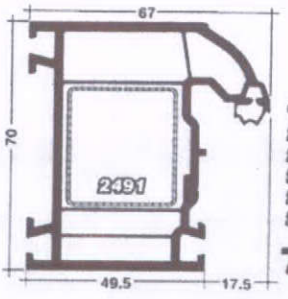

2243 Steel
2249 Steel
2271 Steel
2490 Steel
2270 Alu.

70070

Vents/Casements - 70mm

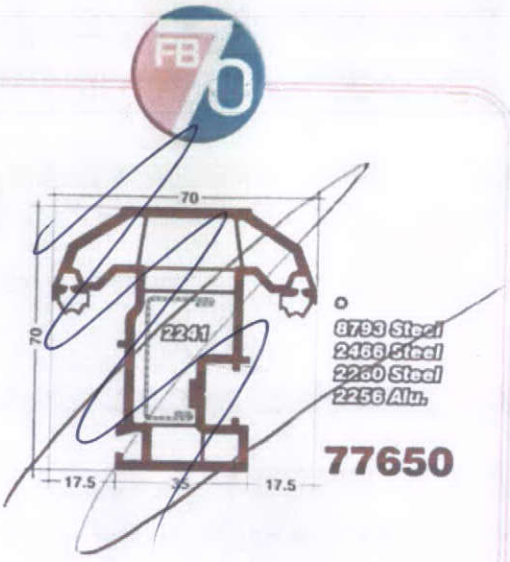

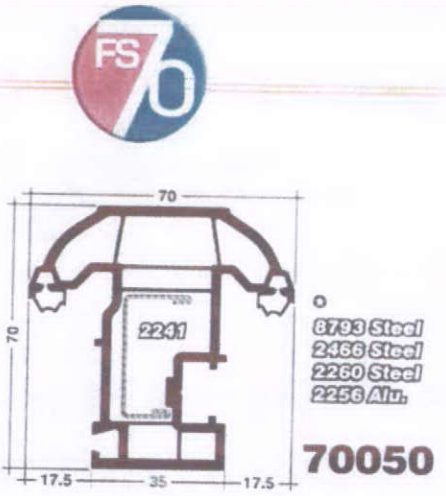

Miscellaneous/Pivot (All Systems)

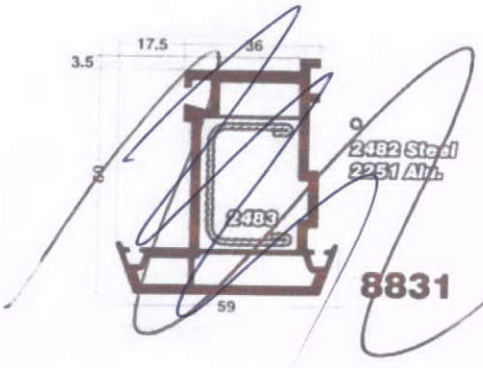

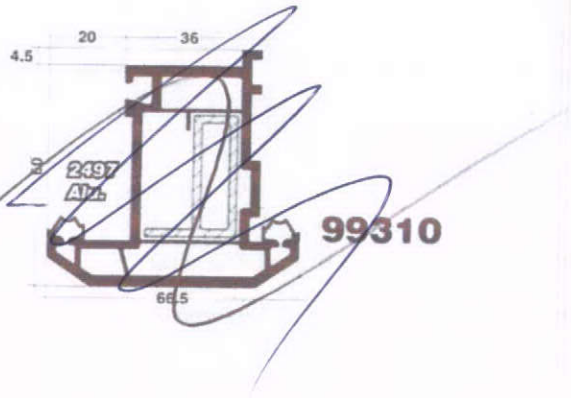

Tilt - Turn Sashes

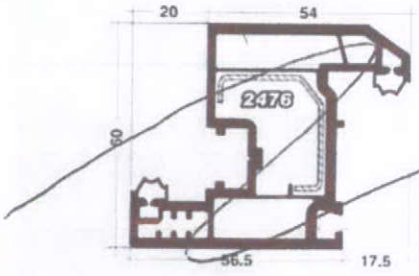

22760

FC 60 FT 70

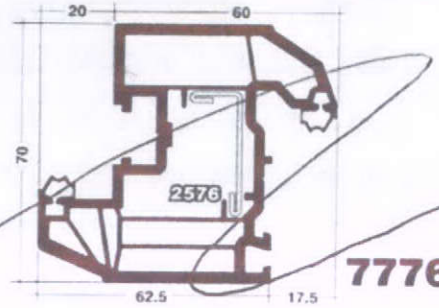

77760

FB 70

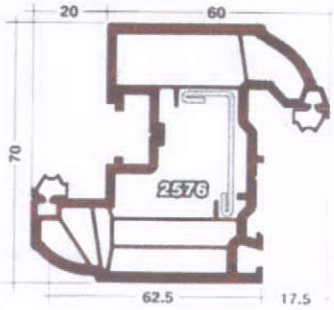

70060

FS 70

Door Profiles
Fully Bevelled 70mm

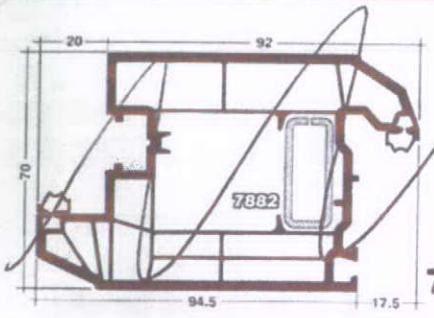

77730

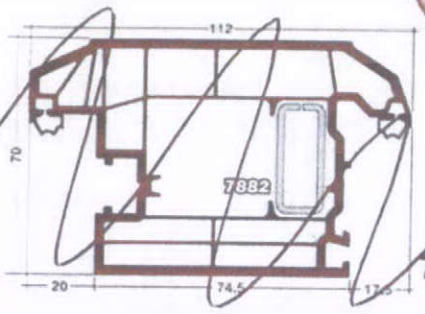

77740

Door Profiles
Fully Sculptured 70mm

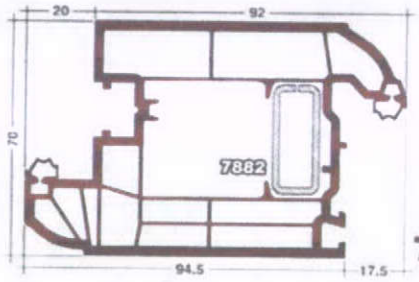

70300

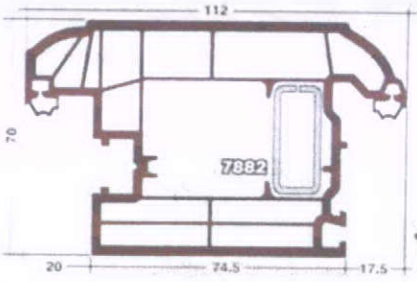

70350

Door Profiles
Floating Mullion (Double Doors), All Systems

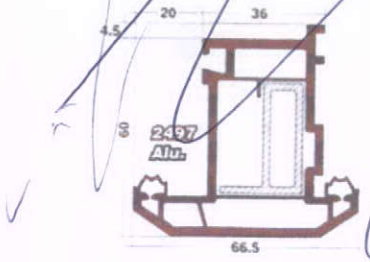

99310
Use with End Caps 9937



9937