DDI/2012/0497

11 SEP 2012

DARK GREEN SHEET
CLADDING TO ALL WALLS
AND ROOF AREAS

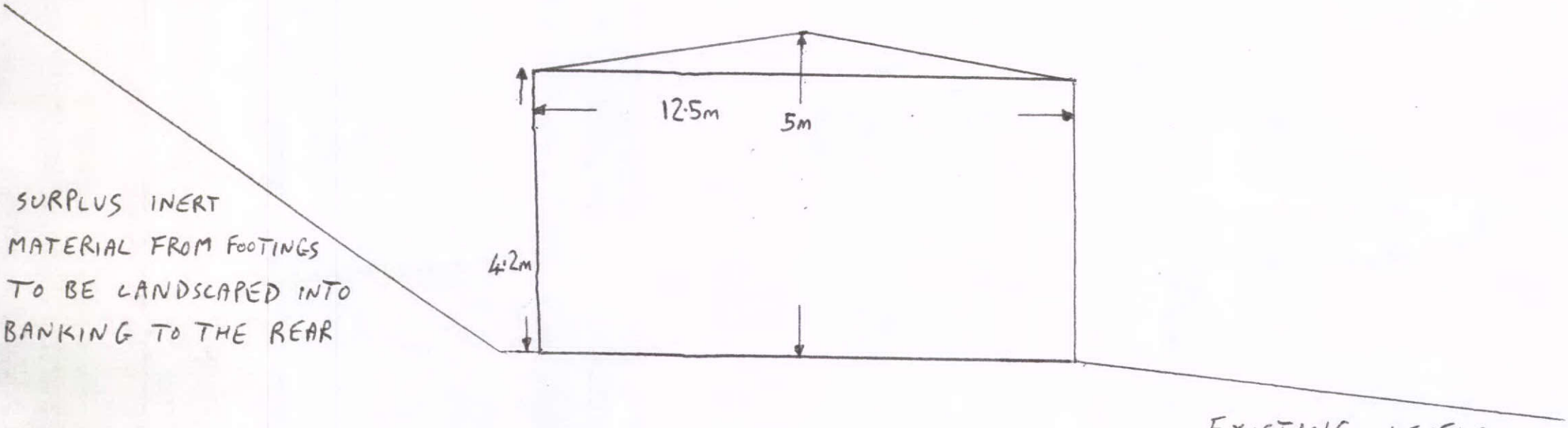

SCALE	DATE	LADMANLOW YARD	DRWG 3	END ELEVATION
1:100		BUXTON		VIEW