HPK/2012/0357

22 JUN 2012

Scale 1:5 @ A4

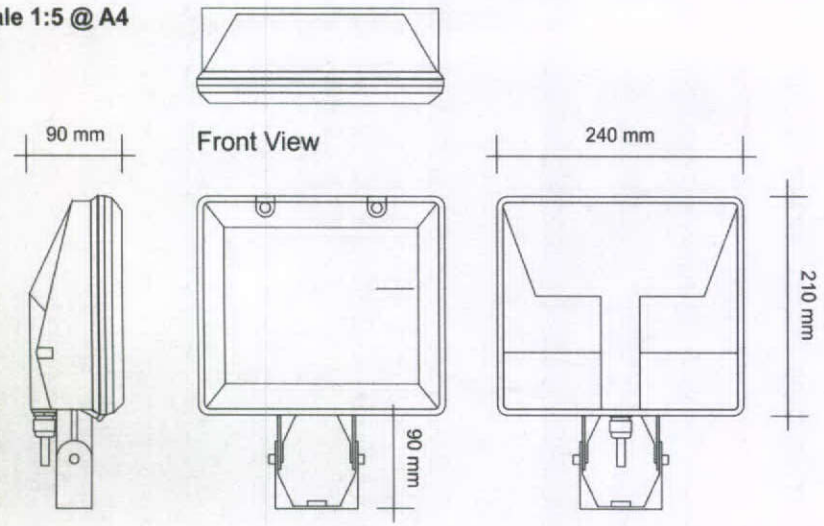







42 w Low Energy Flood lights

insignia
SIGNS AND SERVICES LIMITED

t : 0113 243 8533 f : 0113 243 8733 / e-mail : sales@insigniasigns.biz / www.insigniasigns.biz

This document is the property of Insignia Signs who own the copyright therein. The information in this document is given in confidence and without the written permission of Insignia Signs. Given by contract or

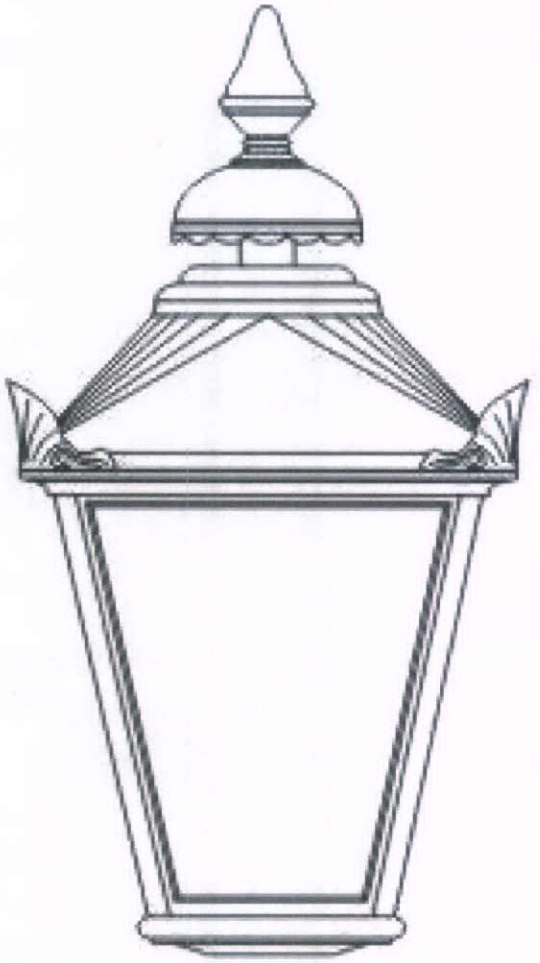

antern	H	W	Code
Cast	560	280	CAST
Cast	660	350	CAST