HPK/2012 / 223
13 APR 2012

TITTLE

TYPICAL CONSTRUCTION DETAILS

PROJECT NAME AND ADDRESS

GARAGE CONVERSION

9 WOODLEA ROAD

DERBYSHIRE

SCALE 1:20 @ A2	DWG. No. 005
DATE APRIL 2012	
CHK. BY	DWG. BY SJH
REF. No	PROJECT

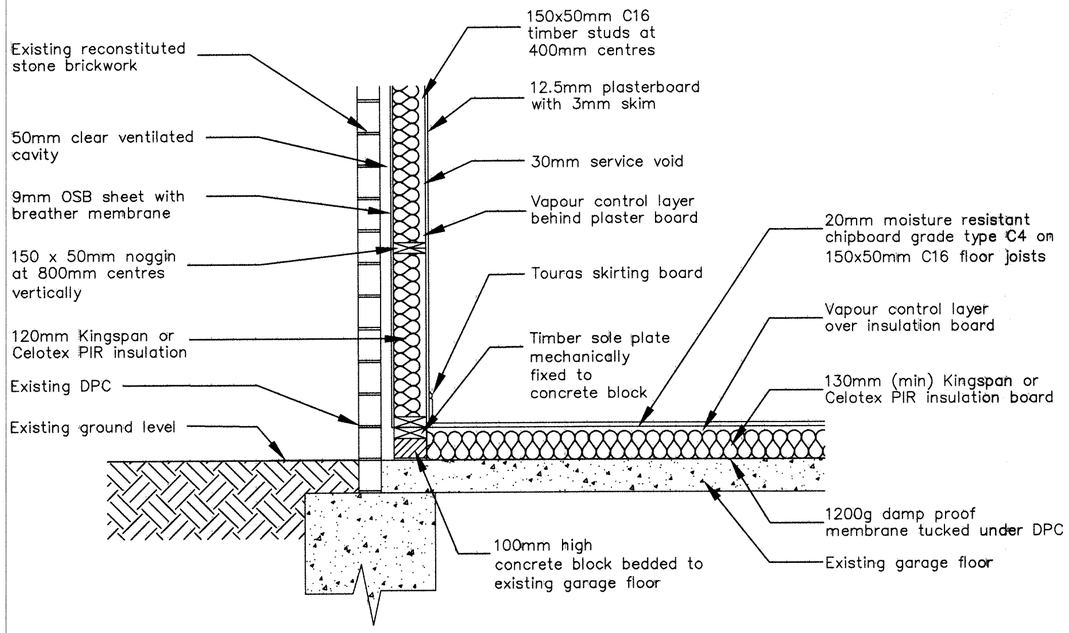

TYPICAL WALL TO FLOOR DETAIL GARAGE CONVERSION

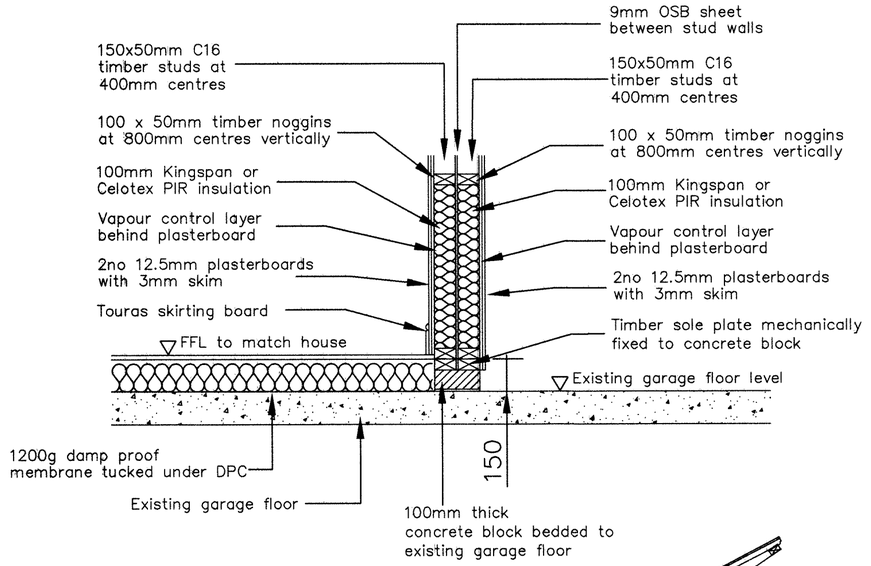

TYPICAL DIVIDING WALL DETAIL GARAGE CONVERSION

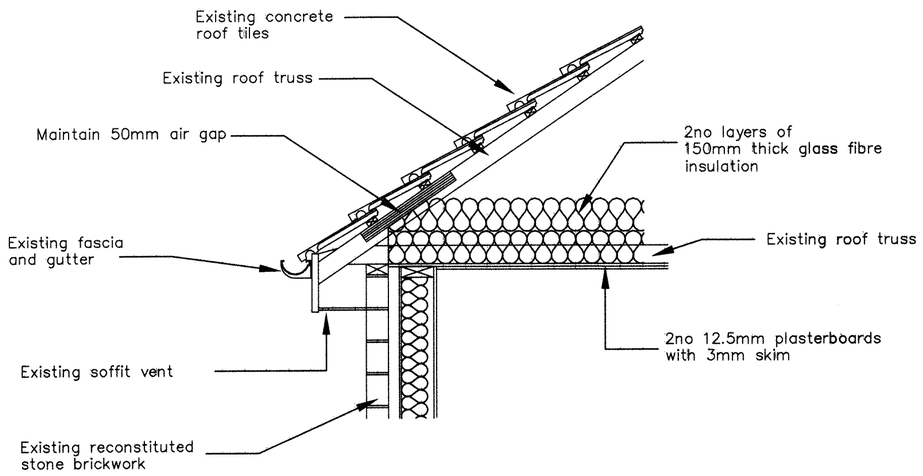

TYPICAL EAVES DETAIL GARAGE CONVERSION

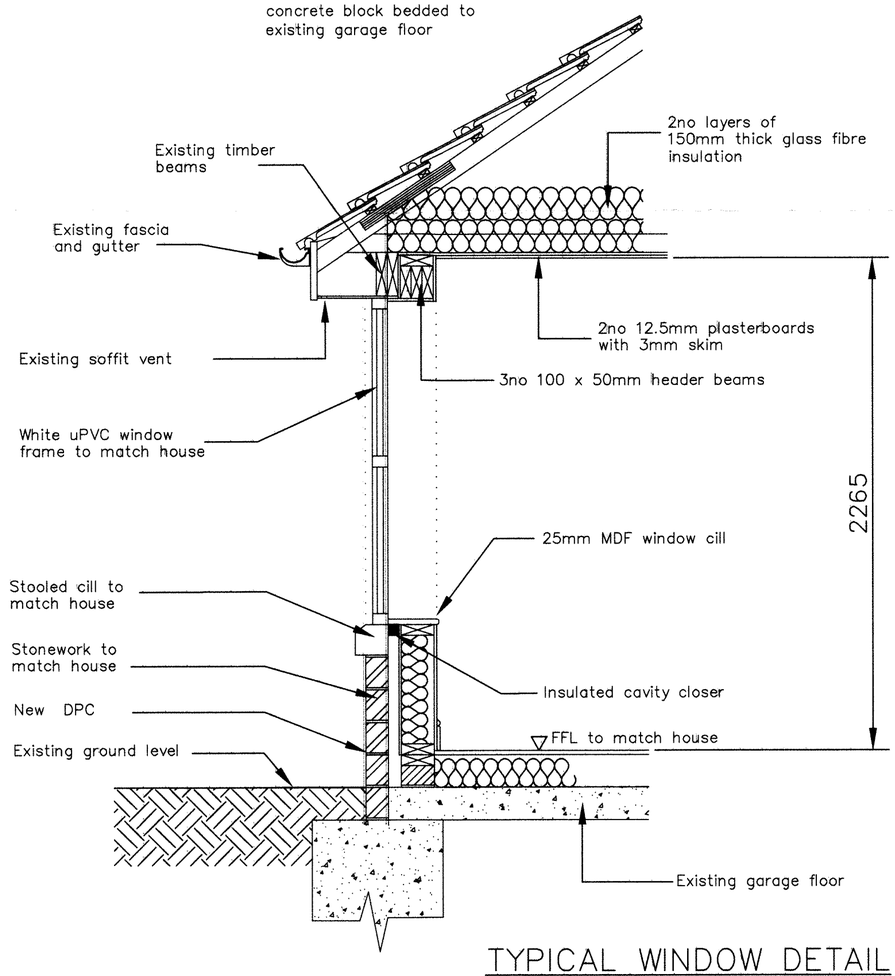

TYPICAL WINDOW DETAIL GARAGE CONVERSION