Thuis drawing is for planning application purposes only and should not be used for any purpose invovling contruction, engineering or similiar.

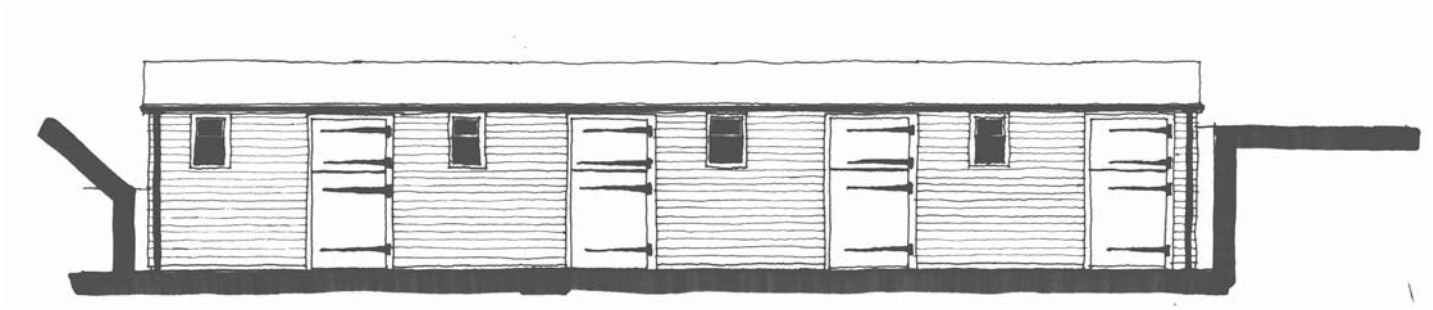

FRONT ELEVATION [To Watford Lane]

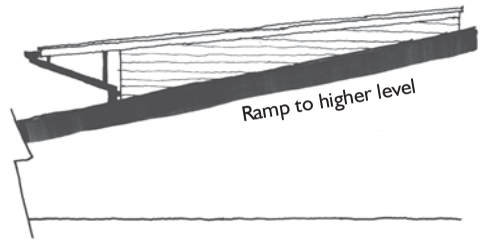

SIDE ELEVATION [North]

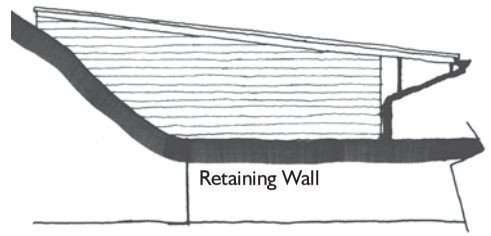

SIDE ELEVATION [South]

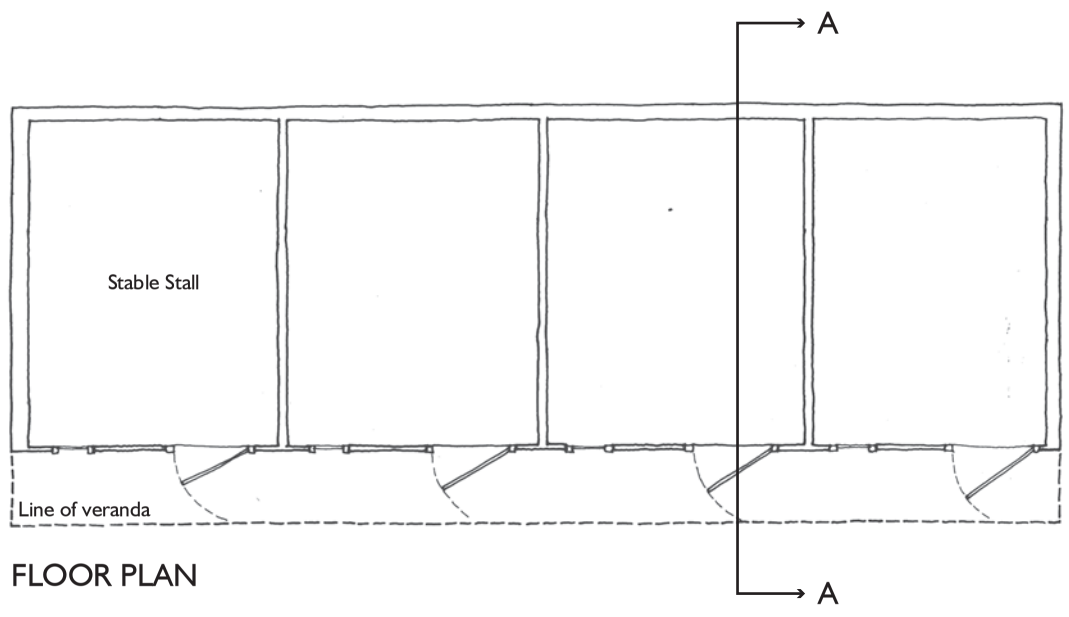

FLOOR PLAN

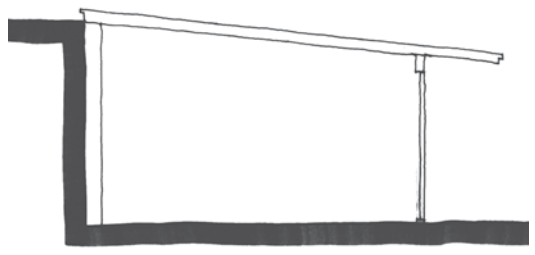

SECTION THROUGH STABLES A - A

e*SCAPE urbanists

e*SCAPE Urbanists Ltd
The Studio, Hartsgrove Farm
Hollin Lane, Sutton
Macclesfield, SK11 0NN
Tel: 01625 615874
Email: hello@escape-urbanists.com

Project Title
WILL HEY FARM STABLES

e*SCAPE Job No.
12-001

Client
MR AND MRS. WILSON

Drawing Number
12-001-P005

Revision
REV -

Drawing Title
PROPOSED STABLE PLANS AND ELEVATIONS

Scale
1:100@ A3

Date
04/02/2012