SAN01-P4A-001
Construction Detail

Sign Type P4A - Bracket Construction details

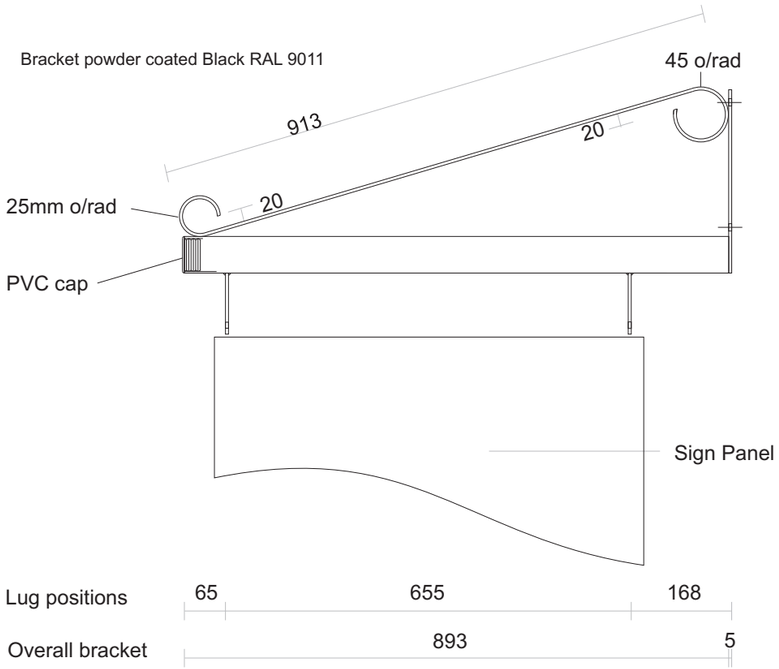

Scale: 1:10 @ A3

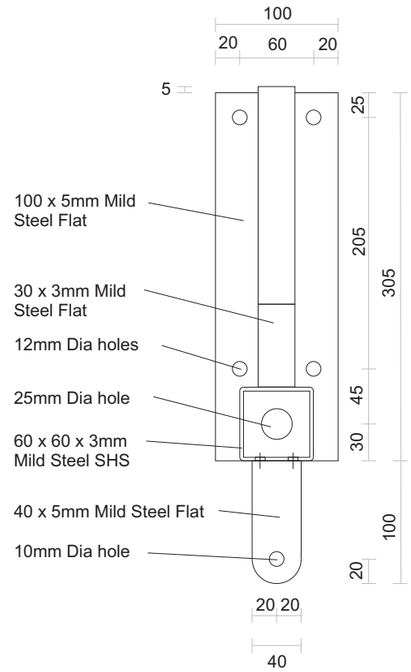

Scale: 1:5 @ A3

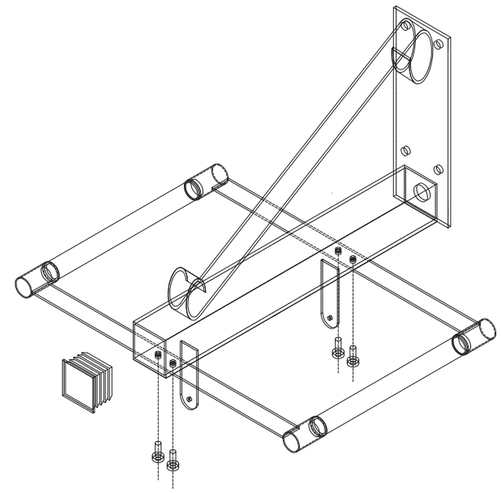

Sign Type P4A - Panel Construction details

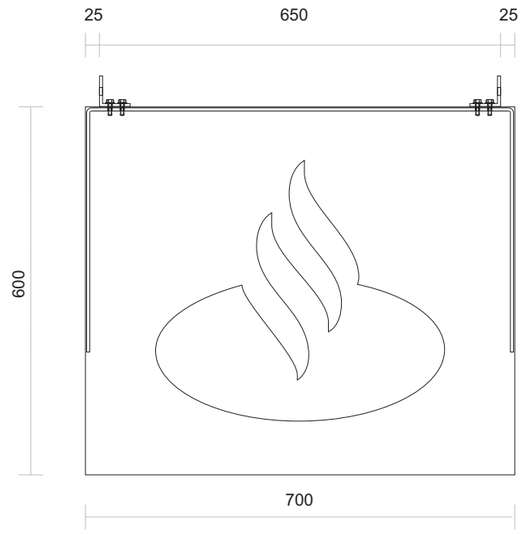

Scale: 1:10 @ A3

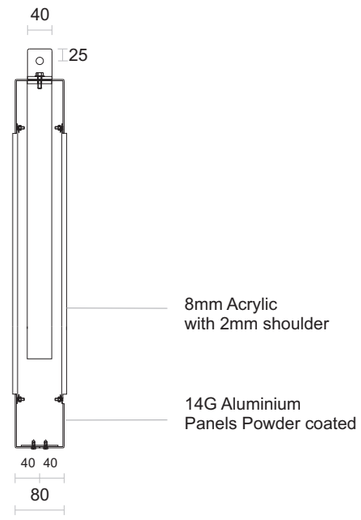

Scale: 1:10 @ A3

Refer to site specific drawings for colour references