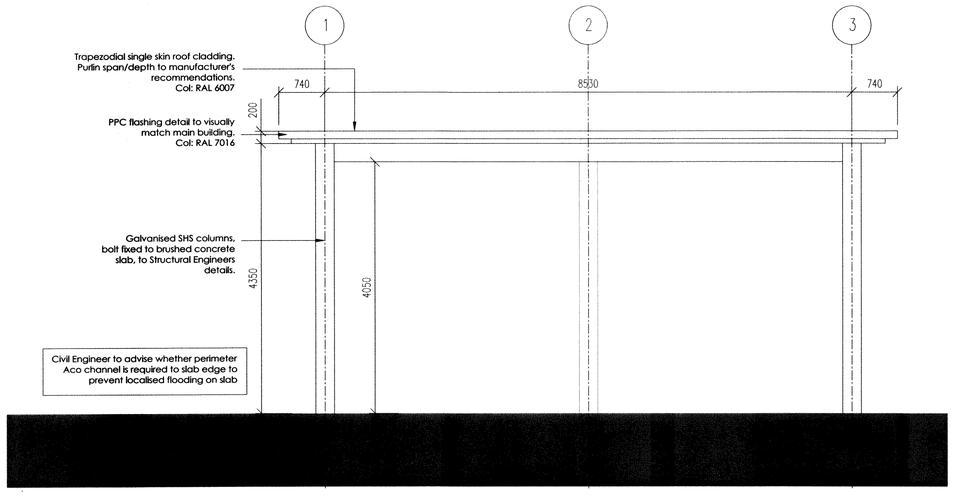

ELEVATION A

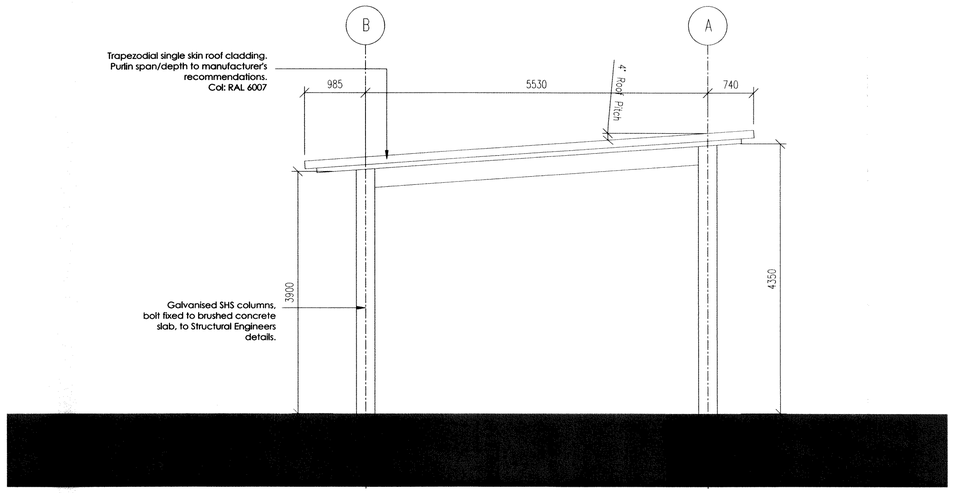

ELEVATION B

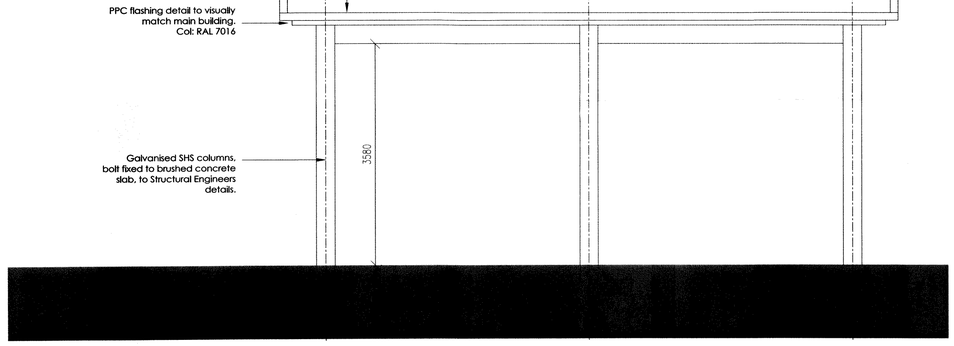

ELEVATION C

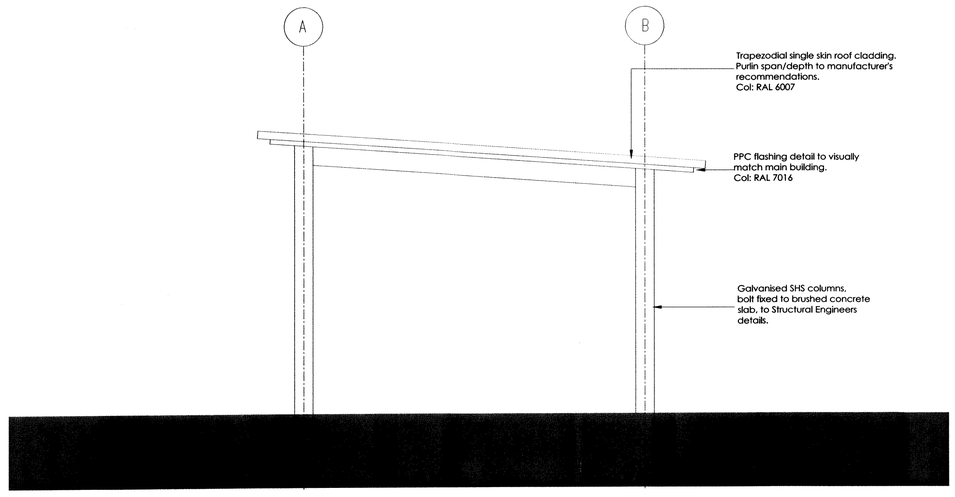

ELEVATION D

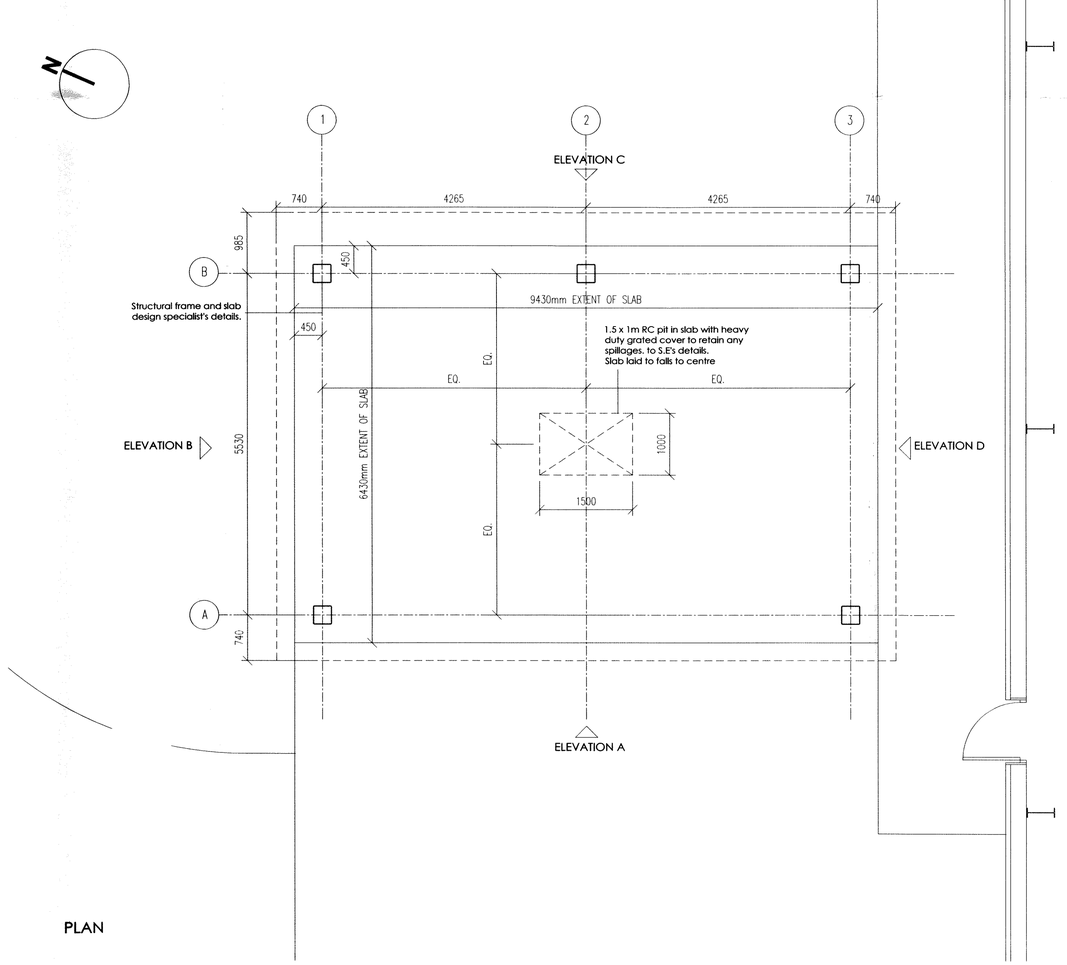

PLAN

General Notes

All site dimensions shall be verified by the Contractor on site prior to commencing any works.

Do not scale from this drawing.

Only work to written dimensions.

This drawing is the property of Fletcher-Rae (UK) Limited (t/a Fletcher-Rae) and copyright is reserved by them. The drawing is not to be copied or disclosed by or to any unauthorised persons without the prior written consent of Fletcher-Rae (UK) Limited.

Revision

Scale	1:50 @ A1
Status	PLANNING
Drawn by	MJQ
Date	30.01.12

Client
NESTLE WATERS

Project
PROJECT MERLIN, BUXTON

Drawing Description
FORKLIFT MAINTENANCE CANOPY

Drawing No. 3691_PL118 Rev.

fletcher|rae

Architecture | Master Planning | Project Management

Hill Quays, 5 Jordan Street, Manchester, M15 4PY

t ■ +44 (0)161 242 1140
w ■ www.fletcher-rae.com
f ■ +44 (0)161 242 1141
e ■ info@fletcher-rae.com