

FRONT ELEVATION - S

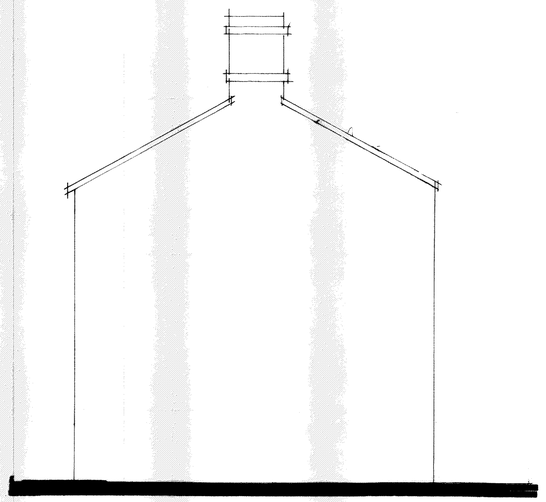

SIDE ELEVATION - W



REAR ELEVATION - N

ALL DIMENSIONS TO BE CHECKED ON SITE.

DO NOT SCALE

IF IN DOUBT - ASK LDP

NO WORK TO COMMENCE ON SITE PRIOR TO PLANNING CONSENT BEING OBTAINED AND BUILDING REGULATIONS APPROVED.

© COPYRIGHT
NOT TO BE REPRODUCED WITHOUT THE WRITTEN AUTHORITY OF LDP.

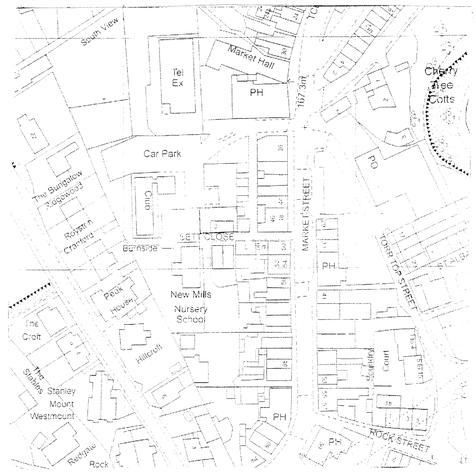

LOCATION PLAN 1:1250

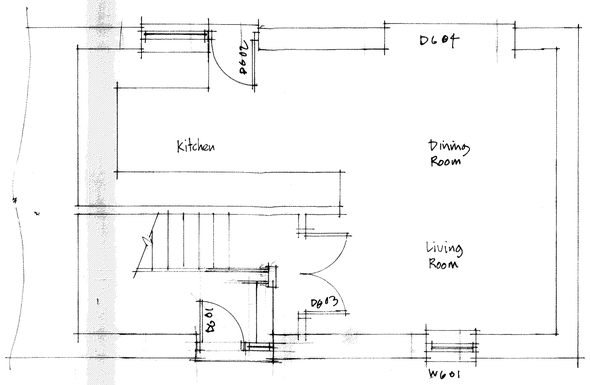

GROUND FLOOR

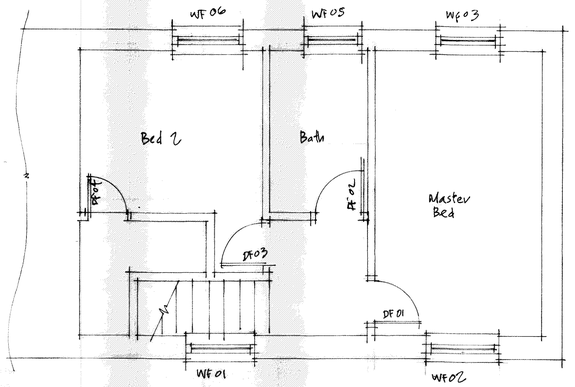

FIRST FLOOR

HIGH PEAK

2 SETT CLOSE, NEW MILLS

MR N. WALKER

PLANS & ELEVATIONS

AS BUILT

LOCKSIDE DESIGN PARTNERSHIP

ARCHITECTURAL + HISTORIC BUILDING CONSULTANTS
Lockside Mill, St. Martins Road, Marple, Stockport SK6 7BZ
Telephone: 0161-427-7721 Fax: 0161-427-7722
www.locksidedesign.co.uk

11/M33/02 1:50 DEC '11