

ELECTRONIC GEAR UNIT FITTED UP TO A MAXIMUM OF 2 METERS AWAY FROM THE LIGHT STRIPS UNIT SUPPLIED COMPLETE WITH 1.8m OF LIGHT SENSOR FLEX WHICH NEEDS TO BE POSITIONED TO A WINDOW

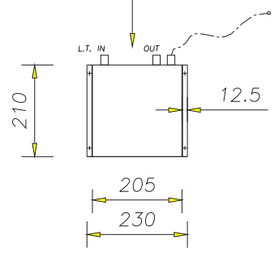

ELECTRONIC GEAR UNIT

UNIT TO BE FITTED ABOVE FALSE CEILING WHERE POSSIBLE, IF NOT ACHIEVEABLE THEN DISCREETLY FITTED TO COLUMNS, REVEALS etc.

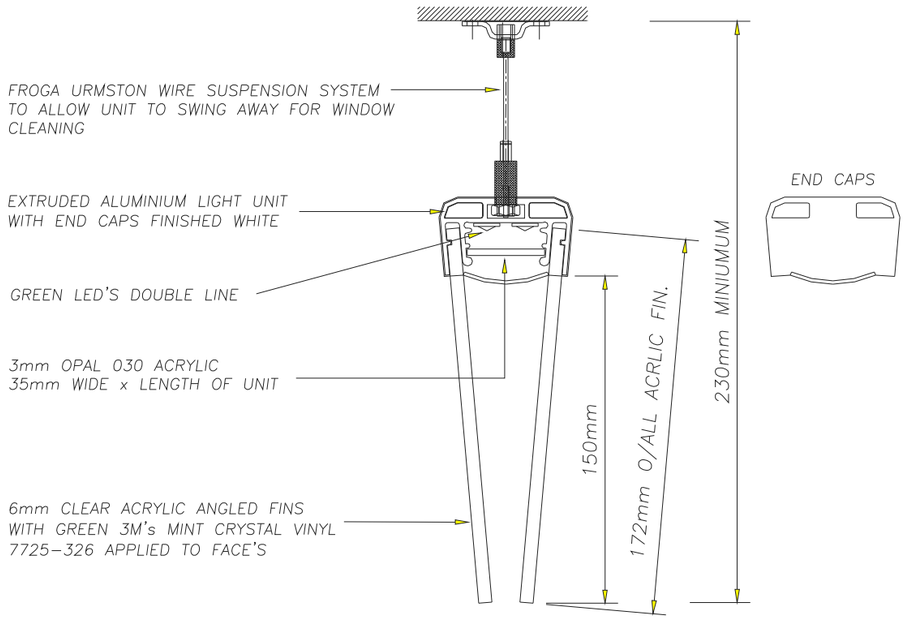

SECTION DETAIL

ELECTRICAL SPECIFICATION :-

A CLEAN SWITCHED FUSED SUPPLY BY OTHERS WILL BE SUPPLIED TO THE WINDOW LOCATION. THE SIGN SUPPLIER WILL BE RESPONSIBLE FOR SUPPLYING THE ELECTONICS THAT CAN UNDERTAKE THE FOLLOWING DISCIPLINES;

TIME CLOCK OPERATION THAT WILL SWITCH THE WINDOW LIGHTING OUT AT 23:59 UNTIL 06:59 WHICH WILL ENABLE THE WINDOW LIGHT TO OPERATE AT FULL ILLUMINATION FROM 06:59-15:59. THE UNIT NEEDS TO DIM FROM 15:59am-23:59pm AT 50% (APPROX) POWER FOR THE NIGHT TIME ILLUMINATION. THE UNIT IS TO BE FITTED WITH A RESET BUTTON FOR ANY POWER FAILURE TO THE UNIT. THE UNIT IS SUPPLIED WITH 2 CORE HALOGEN LOW SMOKE CABLE 1.02mm.

IMPORTANT NOTE :

THE TIMER MUST NOT INTERFERE WITH THE OTHER SITE DISCIPLINES IE. DIMMING, TIME CLOCKS ETC.

ADDITIONAL NOTE :

THE CIRCUIT IS SUPPLIED WITH AN EXTERNAL LIGHT SENSOR TO BRING THE ILLUMINATION LEVEL TO NIGHT TIME OPERATION MODE ON DULL DAYS.

LIGHT READINGS :

TAKEN AT A DISTANCE OF 250mm AWAY = 70.4 CANDELAS or 749 LUX per SQ METRE
TAKEN AT A DISTANCE OF 500mm AWAY = 130 CANDELAS or 1380 LUX per SQ METRE
ILLUMINATION IS STATIC

MULLION MOUNTED LIGHT STRIP IN FRONT OF MARKETING UNIT

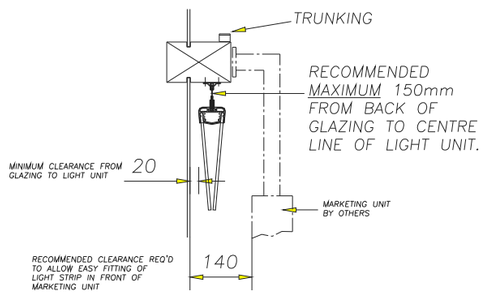

Job Title

LLOYDS TSB
LIGHTSTRIP
FITTING INSTRUCTION

Drawing No.	Sheet no.
	ITEM 1
Scale	Date
1:10 @ A2	12-11-2010

Drawn By

S.COOK

Revisions

F

REV A:- ELEC LED BOX ALTERED 5-4-11 S.C.
REV B:- ADDITIONAL NOTES ADDED 18-4-11 S.C.
REV C:- ELEC NOTES ALTERED 11-5-11 S.D.
REV D:- MORE ELEC NOTES ADDED 13-5-11 S.C.
REV E:- TOLERANCE REDUCED TO 10mm 18-05-11 P.H.
REV F:- TOLERANCE ADJUSTED 03-06-11 P.H. S.D.

BLAZE NEON LTD
5 Patricia Way, Pysons Road,
Broadstairs, Kent. CT10 2XZ.
+44 (0) 1843 601075 +44 (0) 1843 867924
cad@blazeneon.com
www.blazeneon.com

THE COPYRIGHT OF THIS DRAWING IS OWNED BY BLAZE NEON LIMITED AND IS NOT TO BE DISCLOSED TO OTHER PERSONS OR TO BE USED FOR MANUFACTURING PURPOSES WITHOUT PERMISSION.

SHOPFITTER LIST OF REQUIREMENTS

REMOVE ALL OLD LIGHTING
BLINDS
CURTAINS
POLES
ELECTRICAL BOXES (CONDUIT etc)

MAKE SURROUNDING AREA GOOD PRIOR TO FITTING OF TRUNKING AND LIGHT STRIP.

TRUNKING TO BE FITTED BY ELECTRICAL ENGINEER TO EACH SIGN POSITION ON SITE PRIOR TO BLAZE INSTALLATION.

CEILING MOUNTED LIGHT STRIP

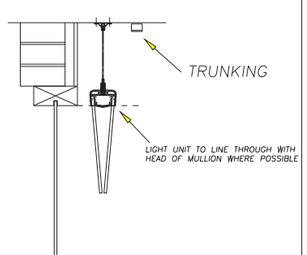

MULLION MOUNTED LIGHT STRIP

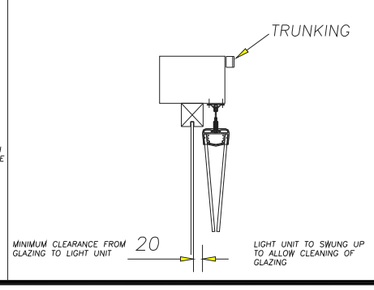

MULLION MOUNTED LIGHT STRIP USING FIXING BRKT

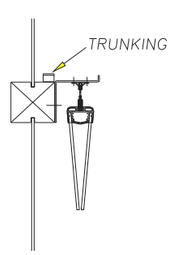

MULLION MOUNTED LIGHT STRIP USING FIXING BRKT

