

NORFOLK STREET ELEVATION

Scale: 1:200

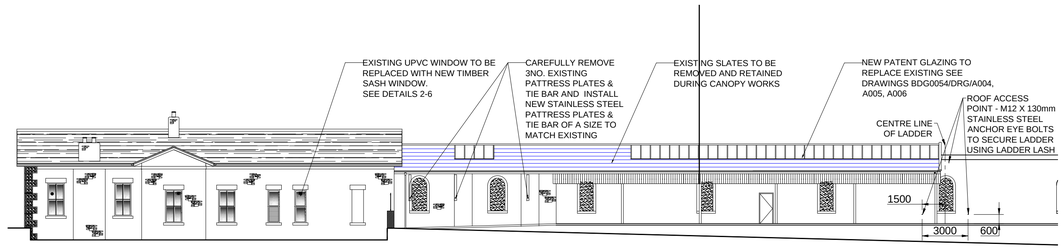

HOWARD STREET ELEVATION

Scale: 1:200

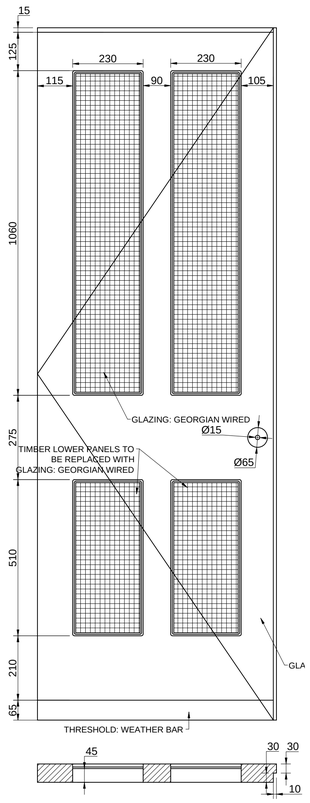

FRONT DOOR LHS FROM INSIDE

Scale: 1:10

LHS INSIDE

- REPLACE ALL GLAZING
- NEW BEADING TO LOWER PANELS
- TEMPORARY REMOVAL OF SIGNAGE

LHS OUTSIDE

- RENEW BEADING LHS OUTSIDE BOTTOM PANEL
- TEMPOARY REMOVAL OF SECURITY EQUIPMENT, IRONMONGERY
- RENEW LOWER BEADING RHS BOTTOM PANEL
- NEW DOOR HANDLE/ KNOB

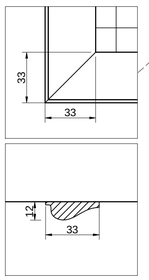

MISC

- RE-PIN BEADING TO CURVED FAN LIGHT LHS FROM OUTSIDE

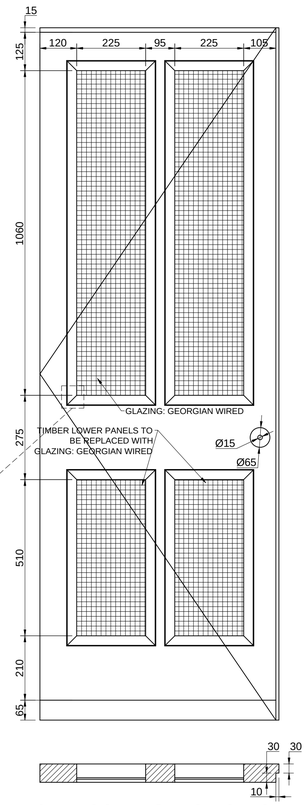

FRONT DOOR LHS FROM OUTSIDE

Scale: 1:10

1 MAIN ENTRANCE DOOR RENOVATION

Scale: 1:10

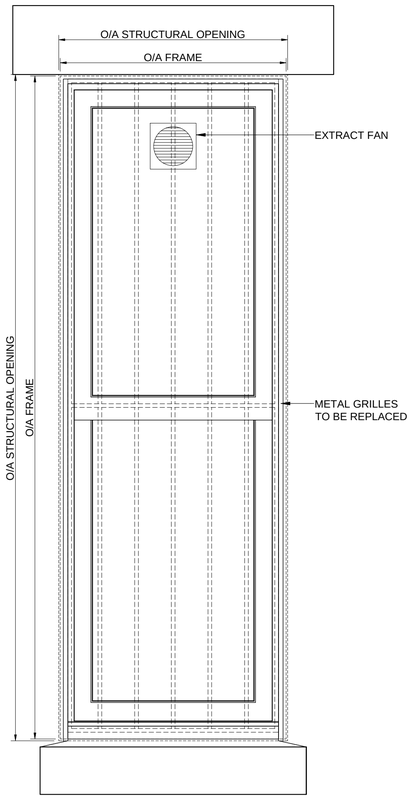

2 STATION BUILDING WINDOW REPLACEMENT

Scale: 1:10

KEY FINISHES - ENTRANCE DOOR

COATING PRODUCTS HAVE BEEN SELECTED WITHIN THE NON-COMPLEX DESIGN DOCUMENTATION AND ARE APPROVED AND TESTED SYSTEMS OBTAINED FROM THE PADS DATABASE AND ARE KNOWN TO MEET NETWORK RAIL MINIMUM STANDARDS IN TERMS OF PERFORMANCE AND DESIGN LIFE. WHERE ALTERNATIVE PRODUCTS ARE PROPOSED BY THE CONTRACTOR THESE MUST BE THE BEST OF THEIR RESPECTIVE KIND AND APPROVED BY NETWORK RAIL IN ACCORDANCE WITH NR/L3/CIV/039 PRIOR TO APPLICATION.

COSHH REGULATIONS:

THE APPLICATOR WILL NEED TO CARRY OUT A COSHH ASSESSMENT PRIOR TO APPLYING THE PRODUCTS DETAILED WITHIN THIS SPECIFICATION, THEREFORE BEFORE USE PLEASE REFER TO THE RELEVANT HEALTH AND SAFETY DATA SHEETS. ENSURE THAT THOSE CARRYING OUT ANY OF THE OPERATIONS DETAILED IN THIS SPECIFICATION ARE EQUIPPED WITH THE CORRECT PERSONAL PROTECTIVE EQUIPMENT. SPECIAL PRECAUTIONS SHOULD BE TAKEN DURING SURFACE PREPARATION OF SURFACES DUE TO THE PRESENCE OF LEAD WITHIN THE EXISTING COATINGS.

TIMBER ENTRANCE DOOR GENERAL REPAIRS

THE MAIN ENTRANCE DOORS TO THE STATION BUILDING ARE TO BE OVERHAULED IN ACCORDANCE WITH THE REQUIREMENTS SET OUT IN BS 8213-4:2007 AND THE FOLLOWING SCHEDULE. ANY WORKS REQUIRED THAT ARE NOT COVERED IN THE FOLLOWING SPECIFICATION ARE TO BE BROUGHT TO THE ATTENTION OF THE NETWORK RAIL REPRESENTATIVE IMMEDIATELY FOR INSPECTION AND ANY WORKS RESULTING FROM THE INSPECTION WILL BE INSTRUCTED ACCORDINGLY.

ALLOW FOR REPLACING ANY DAMAGED OR DEFECTIVE WINDOW BEADS TO THE DOOR WITH DARK HARDWOOD OGEE MOULDINGS (APPROXIMATELY 12X33MM TO MATCH THE EXISTING). BEADS SHALL BE FIXED TO THE DOOR FACE, TO MATCH THE EXISTING INCLUDING ANY SPLICE JOINTS AND MITRES AS REQUIRED.

REMOVE ANY DEFECTIVE OR PERISHED SEALANT AROUND THE DOOR. THE JOINT SURFACES MUST BE CLEAN, DRY AND FREE FROM ALL CONTAMINATION. THE SURFACES SHOULD BE DEGREASED USING AN APPROPRIATE CLEANER. WHERE BACKING IS REQUIRED, APPROPRIATE JOINT FILLER E.G. CLOSED CELL POLYETHYLENE FOAM, SHOULD BE USED TO PROVIDE THE CORRECT JOINT DEPTH. ALL JOINT PREPARATION, PRIMING, AND SEALANT APPLICATION SHOULD BE CARRIED OUT IN ACCORDANCE WITH BS 8000 PART 16. APPLY ARBOKOL 1000 (OR SIMILAR APPROVED) HIGH DURABILITY ONE PART POLYSULPHIDE SEALANT USING A CAULKING GUN. ENSURE ALL NEW AND EXISTING JOINTS ARE SMOOTH, CONTINUOUS AND CORRECTLY FORMED AROUND THE FRAME. REMOVE ANY EXCESS SEALANT ON COMPLETION.

TO AREAS OF IMPACT DAMAGE ON THE DOOR SURFACE. ALLOW FOR THE EXISTING DECORATIVE COATING TO BE CAREFULLY REMOVED AND LIGHTLY ABRADED DOWN TO BARE WOOD. SOAK THE AREA OF IMPACT DAMAGE WITH WATER AND ALLOW THE TIMBER TO SWELL UNTIL THE DAMAGED AREA IS FLUSH WITH SURROUNDING SURFACES. LIGHTLY ABRADE THE AREA AGAIN TO FEATHER AND LEVEL WITH SURROUNDING SURFACES AND LEAVE READY TO BE APPLIED WITH PROTECTIVE COATING, AS DETAILED BELOW.

REMOVE ANY DEFECTIVE OR DECAYED TIMBER (FOR EXAMPLE WET ROT) RETAINING AS MUCH OF THE SOUND TIMBER, AS FAR AS REASONABLY POSSIBLE, AND PREPARE AREA FOR SPLICE REPAIR. SPLICE REPAIR JOINTS ARE TO BE FORMED USING 'MALE/FEMALE' DIAGONAL JOINTS WITH DIAGONAL FALLS PREFERABLY AWAY EXTERNAL FACES. USE MATCHING GRAIN AND WOOD SPECIES FOR THE SPLICED TIMBER AND ENSURE THE NEW TIMBER IS WELL SEASONED AND OF A SIMILAR MOISTURE CONTENT TO THE EXISTING TIMBER. AVOID USING TIMBER WITH SHAKES, FISSURES, WARPS, SAPWOOD OR LARGE KNOTS. SPLICED JOINTS ARE TO BE MECHANICALLY FIXED WITH STAINLESS STEEL SCREWS AND GLUED. WHERE POSSIBLE, FIXING SCREWS SHOULD BE DRIVEN FROM THE INSIDE FACE OF THE TIMBER. TO AREAS OF MINOR SURFACE DECAY (WHERE SPLICE REPAIRS ARE NOT NECESSARY) SCRAPE OUT THE AFFECTED TIMBER UNTIL SOUND TIMBER IS REACHED AND THEN TREAT WITH PRESERVATIVE. ONCE THE PRESERVATIVE HAS DRIED PRIME THE AREA AND BUILD UP WITH FILLER, SAND DOWN UNTIL SMOOTH AND FLUSH WITH SURROUNDING TIMBER SECTIONS AND LEAVE READY FOR DECORATION (AS DETAILED BELOW). TO AREAS OF LARGER DAMAGE PROCEED AS ABOVE BUT PARTIALLY FILL ANY VOIDS WITH A TIMBER PATCH FOLLOWED BY FILLER AROUND THE EDGES.

DAMAGED GLAZING PANES AND LOW LEVEL TIMBER INFILL PANELS ARE TO BE REMOVED AND REPLACED WITH 6MM PILKINGTON PYROSHIELD 2 (OR SIMILAR APPROVED) CLEAR SAFETY WIRED GLASS AND FITTED INTO EXISTING FRAMES IN ACCORDANCE WITH NBS/L40. ALL NEW GLAZING SHOULD BE EXTERNALLY BEADED TO MATCH EXISTING AND CONFORM TO WEATHERTIGHTNESS IN ACCORDANCE WITH BS 6375-1. ALL NEW AND EXISTING GLAZING SHOULD BE THOROUGHLY CLEANED AND POLISHED ON COMPLETION.
ENSURE THAT ALL FRAMES, CILLS, ETC ARE PLUMB AND SQUARE AND SITE LINES ACROSS THE FENESTRATION ARE VISUALLY CORRECT. UNDERTAKE ANY MODIFICATIONS AS NECESSARY TO RECTIFY ANY IRREGULARITIES.

PROTECTIVE COATING TO TIMBERWORK
ALLOW FOR REMOVAL OF ALL IRONMONGERY AND DOOR FURNITURE TO ALLOW ALL SURFACES TO BE DECORATED.
ALL PREPARED TIMBER SURFACES SHALL BE APPLIED WITH NEW T51 PROTECTIVE COATING SYSTEM, ALL IN ACCORDANCE WITH NETWORK RAIL MODEL CLAUSE NR/L3/CIV/140/170 AND 174, NETWORK RAIL STANDARD NR/L3/CIV/040 AND GENERALLY SHALL BE APPLIED IN ACCORDANCE WITH THE BASIC WORKMANSHIP REQUIREMENTS OF BS 8000-12: 1989 - WORKMANSHIP ON BUILDING SITES, CODE OF PRACTICE FOR DECORATIVE WALL COVERINGS AND PAINTING.

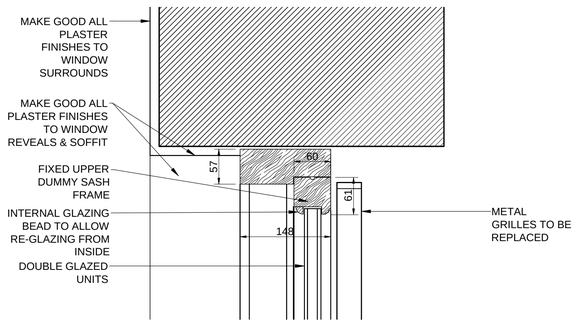

3 REPLACEMENT WINDOW HEAD DETAIL

Scale: 1:5

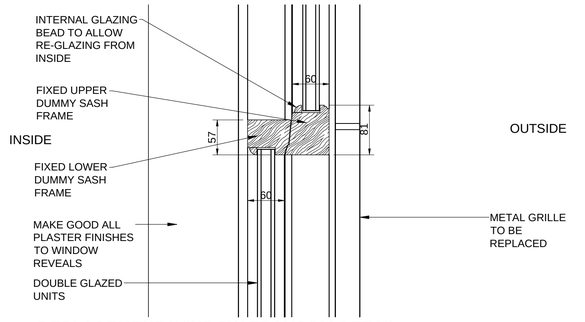

4 REPLACEMENT WINDOW TRANSOM DETAIL

Scale: 1:5

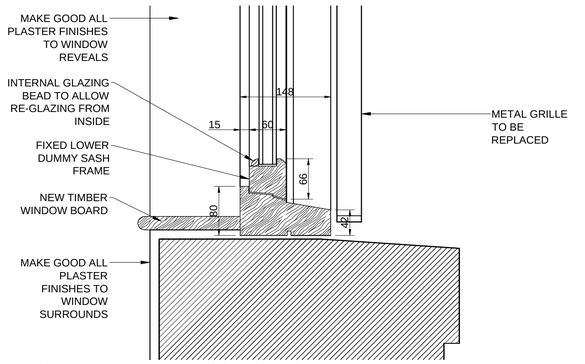

5 REPLACEMENT WINDOW CILL DETAIL

Scale: 1:5

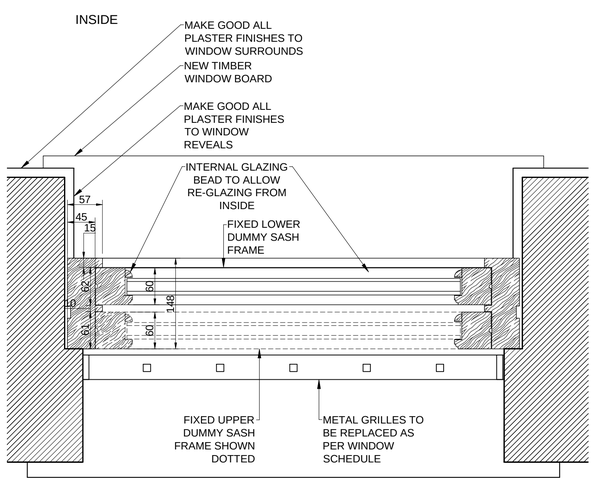

6 REPLACEMENT WINDOW CROSS SECTION

Scale: 1:5

LEGEND/NOTES

THIS DRAWING IS TO BE READ WITH AND FORMS PART OF THE PROJECT DOCUMENTS LISTED BELOW:

CIVILS DOCUMENTS:

BDG0054(M)/CIV/FORM NCC - NON COMPLEX DESIGN FORM	
BDG0054(M)/DRG/A001 -	**EXISTING PLATFORM LAYOUT**
BDG0054(M)/DRG/A002 -	**PROPOSED PLATFORM LAYOUT**
BDG0054(M)/DRG/A003 -	**EXISTING & PROPOSED PLATFORM SECTIONS**
BDG0054(M)/DRG/A004 -	**EXISTING CANOPY PLANS/ SECTIONS/ ELEVATIONS**
BDG0054(M)/DRG/A005 -	**PROPOSED CANOPY PLANS/ SECTIONS/ DETAILS**
BDG0054(M)/DRG/A006 -	**PROPOSED CANOPY DETAILS**
BDG0054(M)/DRG/A007 -	**STATION BUILDING EXISTING ELEVATIONS & PROPOSED RENOVATIONS**
BDG0054(M)/DRG/E001 -	**EXISTING ELECTRICAL LAYOUT**
BDG0054(M)/DRG/E002 -	**PROPOSED ELECTRICAL LAYOUT**
P-0597-194-SU-DRG-001-	**PLATFORM 1 TOPOGRAPHICAL SURVEY**
P-0623-150-TR-REP-002-	**GAUGING SCHEME**

NOTE : PLATFORM EDGE TO BE SETOUT IN ACCORDANCE WITH TRITECH PLATFORM GAUGING OFFSETS

0 100 200 300 400 500mm
SCALE 1:5
0 200 400 600 800 1000mm
SCALE 1:10
0 4 8 12 16 20m
SCALE 1:200

REV	DATE	DESCRIPTION OF REVISIONS	DRAWN	CHK'D	APPR'D
B01	23/02/11	FOR ISSUE NON COMPLEX WORKS	AA	SE	JW

SAFETY HEALTH AND ENVIRONMENTAL INFORMATION

THE HAZARDS AND RISKS ASSOCIATED WITH THE WORKS SHOWN ON THIS DRAWING AND DESCRIBED IN THE SCHEDULE OF WORKS ARE CONSIDERED TO BE WITHIN THE REASONABLE, NORMAL AND ACCEPTABLE LIMITS FOR GENERAL BUILDING AND MAINTENANCE WORKS. PLEASE REFER TO DESIGNER RISK ASSESSMENT

DOCUMENT REF: BDG0054(M)/DRA/A01

STATUS

APPROVED FOR CONSTRUCTION

INVESTMENT PROJECTS
BUILDINGS AND CIVILS
SQUARE ONE
4 TRAVIS ST
MANCHESTER
M1 2NY

DESIGNERS

INVESTMENT PROJECTS
BUILDINGS & CIVILS
BUILDING DESIGN GROUP
MANCHESTER
SQUARE ONE
4 TRAVIS STREET
MANCHESTER
M1 2NY
TEL: 0161 880 3888 FAX: 0161 880 3981

PROJECT: BDG0054(M)

GLOSSOP STATION
PLATFORM RESURFACING
AND CANOPY WORKS

DRAWING TITLE

STATION BUILDING EXISTING ELEVATIONS AND PROPOSED RENOVATIONS

DESIGNER	ABU WADIE	SIGNED ABU WADIE	DATE 23/02/2011
DRAWN	ANDREW AINSCOUGH	SIGNED ANDREW AINSCOUGH	DATE 23/02/2011
CHECKED	STEVE ELLIS	SIGNED STEPHEN ELLIS	DATE 23/02/2011
APPROVED	JOHN WINSTANLEY	SIGNED JOHN WINSTANLEY	DATE 23/02/2011
SCALE(S) AT A1 SHEET SIZE 594 X 841	1:5/ 1:20/ 1:200	ELR & MILEAGE	GDW 0 MILES 01 YARDS
DRAWING NUMBER	BDG0054(M)/DRG/A007	REVISION	C01