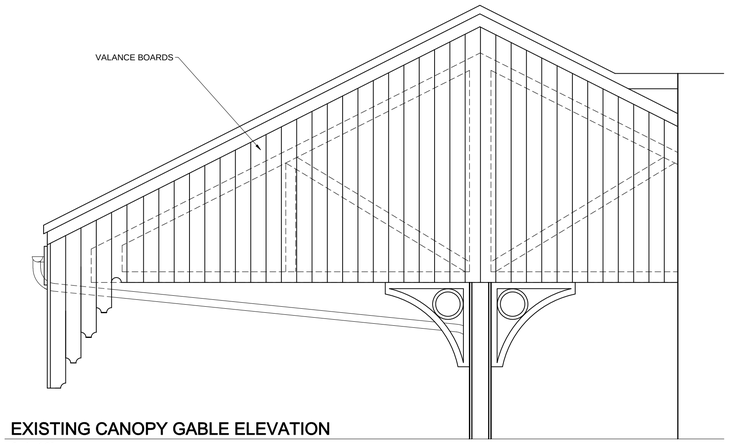

EXISTING CANOPY GABLE ELEVATION

Scale: 1:20

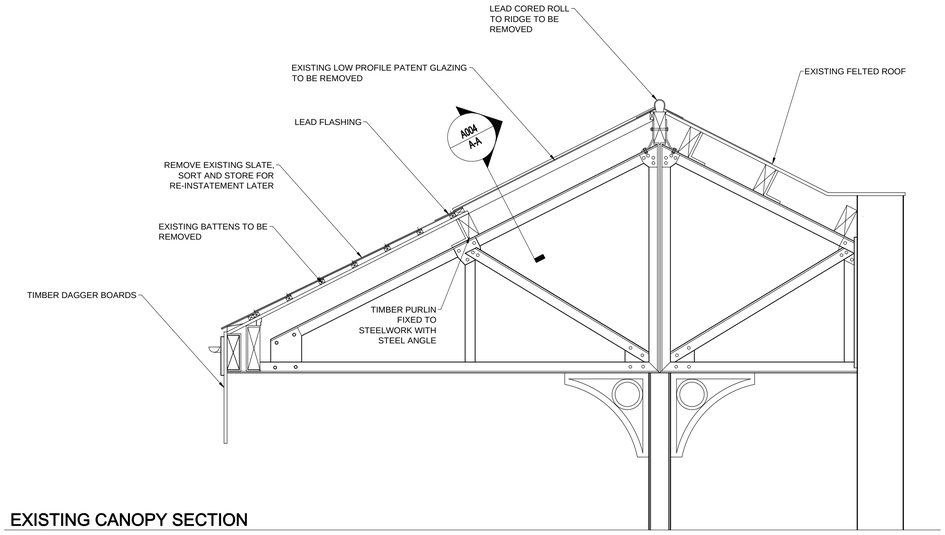

EXISTING CANOPY SECTION

Scale: 1:20

GENERAL CANOPY NOTES

CRASH DECK OR OTHER SUITABLE FALL PROTECTION TO BE CONSIDERED BENEATH ALL OVERHEAD WORKS (I.E. CANOPY REMOVAL, INSTALLATION OF PATENT GLAZING AND DECORATION). FALL PROTECTION SHALL BE INSTALLED IN A PHASED MANNER TO ACCOMMODATE PASSENGER MOVEMENTS THROUGH THE STATION DURING THE WORKS.

REMOVE ALL EXISTING CANOPY GLAZING, INCLUDING GLAZING BARS, LEAD FLASHINGS AND ASSOCIATED TIMBER FIRINGS AND DISPOSE OF OFF SITE. PROVIDE TEMPORARY PROTECTION TO OPENING AND LEAVE READY FOR NEW PATENT GLAZING TO BE FITTED.

CAREFULLY STRIP OFF THE EXISTING SLATE ROOF COVERING TO THE EXTENT OF THE CANOPY TAKING CARE TO RETAIN AS MUCH SLATE AS POSSIBLE. ALLOCATE A SUITABLE AREA ON SITE TO STORE THE RE-CLAIMED SLATE, SORT (IN TERMS OF SIZE AND THICKNESS) AND STORE SAFELY UNTIL READY FOR RE-USE LATER.

CAREFULLY REMOVE THE EXISTING TIMBER CORED ROLL AND LEAD LINING FROM THE CANOPY RIDGE AND DISPOSE OF OFF SITE. INCLUDE FOR THE REMOVAL OF THE LEAD VERGE CAPPING.

CAREFULLY REMOVE THE EXISTING TIMBER BATTENS/TILTING FILLETS FROM THE T&G SARKING BOARDS ENSURING THAT ALL NAILS/FIXINGS ARE FULLY REMOVED AND DISPOSED OF OFF SITE.

CAREFULLY STRIP OFF EXISTING LEAD & FELT FLASHING TO VALLEY GUTTER BETWEEN MAIN STATION BUILDING AND CANOPY ROOFS AND DISPOSE OFF SITE.

REMOVE ALL EXISTING TIMBER TO VALLEY GUTTER ENSURING THAT ALL NAILS/ FIXINGS ARE FULLY REMOVED AND DISPOSED OF OFF SITE.

ALLOW FOR REPLACING 15% DECAYED SARKING BOARD WITH TREATED TIMBER OF SIZE TO MATCH EXISTING. ALL AREAS OF DECAYED TIMBER SARKING SHALL BE BROUGHT TO THE ATTENTION OF THE NETWORK RAIL REPRESENTATIVE WITHOUT DELAY. SUBSEQUENT INSTRUCTIONS WILL BE GIVEN FOR REMEDIAL ACTION.

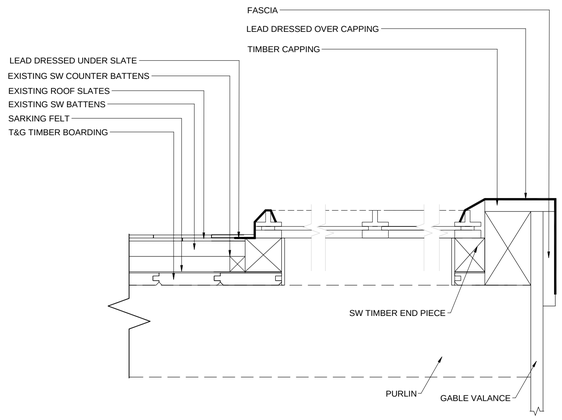

EXISTING VERGE SECTION A-A

Scale: 1:5

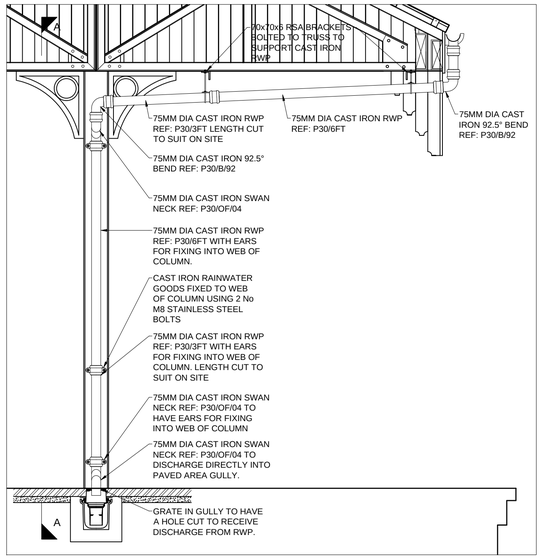

PROPOSED CAST IRON RWP REPLACEMENT

Scale: 1:25

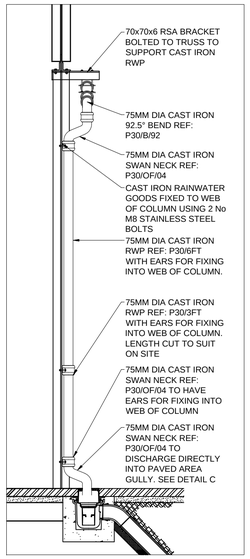

SECTION A-A

Scale: 1:25

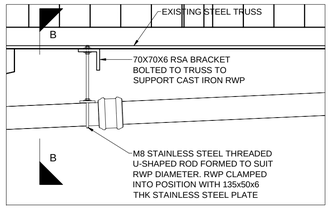

DETAIL A

Scale: 1:10

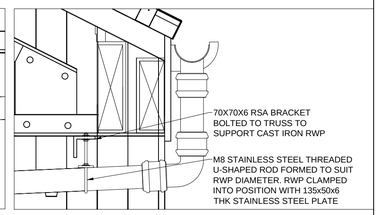

DETAIL B

Scale: 1:10

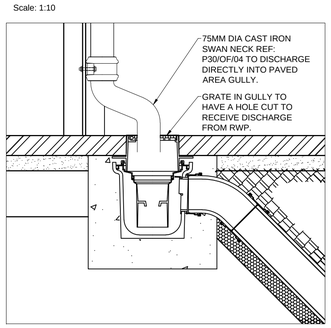

DETAIL C

Scale: 1:10

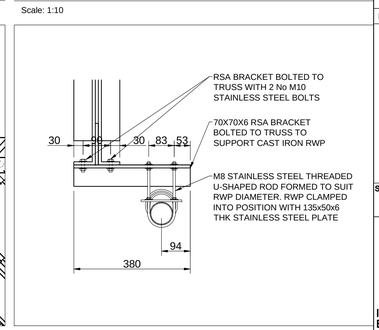

SECTION B-B

Scale: 1:10

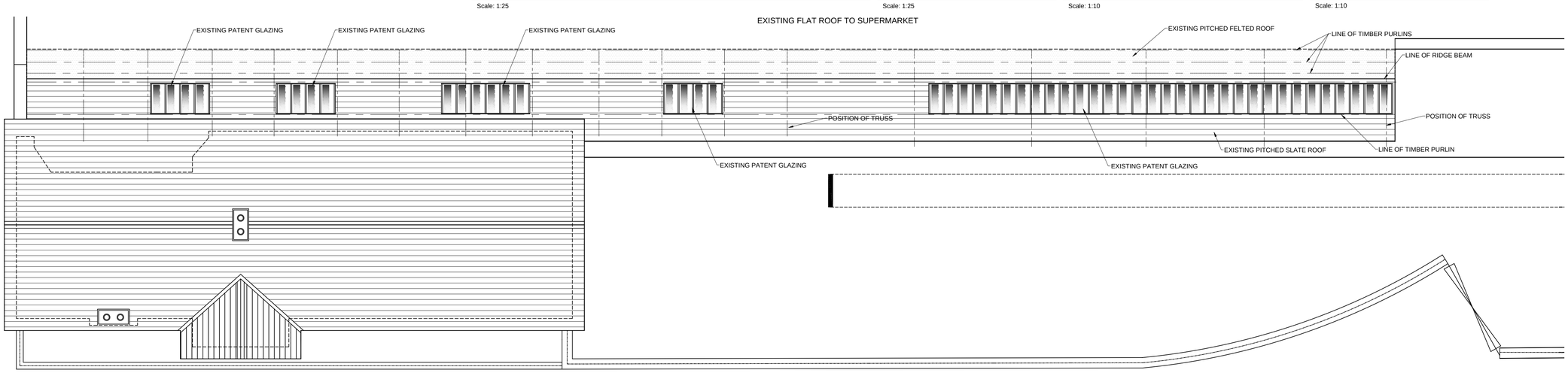

EXISTING CANOPY ROOF PLAN

Scale: 1:100

LEGEND/NOTES

THIS DRAWING IS TO BE READ WITH AND FORMS PART OF THE PROJECT DOCUMENTS LISTED BELOW:

CIVILS DOCUMENTS:

BDG0054(M)/CIV/FORM NCC -	NON COMPLEX DESIGN FORM
BDG0054(M)/DRG/A001 -	EXISTING PLATFORM LAYOUT
BDG0054(M)/DRG/A002 -	PROPOSED PLATFORM LAYOUT
BDG0054(M)/DRG/A003 -	EXISTING & PROPOSED PLATFORM SECTIONS
BDG0054(M)/DRG/A004 -	EXISTING CANOPY PLANS/ SECTIONS/ ELEVATIONS
BDG0054(M)/DRG/A005 -	PROPOSED CANOPY PLANS/ SECTIONS/ DETAILS
BDG0054(M)/DRG/A006 -	PROPOSED CANOPY DETAILS
BDG0054(M)/DRG/A007 -	STATION BUILDING EXISTING ELEVATIONS & PROPOSED RENOVATIONS
BDG0054(M)/DRG/E001 -	EXISTING ELECTRICAL LAYOUT
BDG0054(M)/DRG/E002 -	PROPOSED ELECTRICAL LAYOUT
P-0597-194-SU-DRG-001-	PLATFORM 1 TOPOGRAPHICAL SURVEY
P-0623-150-TR-REP-002-	GAUGING SCHEME

NOTE : PLATFORM EDGE TO BE SETOUT IN ACCORDANCE WITH TRITECH PLATFORM GAUGING OFFSETS

0 0.4 0.8 1.2 1.6 2.0m

SCALE 1:20

0 2 4 6 8 10m

SCALE 1:100

REV	DATE	DESCRIPTION OF REVISIONS	DRAWN	CHK'D	APPR'D
C01	05/04/11	CAST IRON RWP DETAILS ADDED & ISSUED FOR CONSTRUCTION	DPC	SE	JW
B01	23/02/11	FOR ISSUE NON COMPLEX WORKS	AA	SE	JW

SAFETY HEALTH AND ENVIRONMENTAL INFORMATION

THE HAZARDS AND RISKS ASSOCIATED WITH THE WORKS SHOWN ON THIS DRAWING AND DESCRIBED IN THE SCHEDULE OF WORKS ARE CONSIDERED TO BE WITHIN THE REASONABLE, NORMAL AND ACCEPTABLE LIMITS FOR GENERAL BUILDING AND MAINTENANCE WORKS. PLEASE REFER TO DESIGNER RISK ASSESSMENT

DOCUMENT REF: BDG0054(M)/DRA/A01

STATUS

APPROVED FOR CONSTRUCTION

INVESTMENT PROJECTS
BUILDINGS AND CIVILS
SQUARE ONE
4 TRAVIS ST
MANCHESTER
M1 2NY

DESIGNERS

INVESTMENT PROJECTS
BUILDINGS & CIVILS
BUILDING DESIGN GROUP
MANCHESTER
SQUARE ONE
4 TRAVIS STREET
MANCHESTER
M1 2NY
TEL: 0161 880 3888 FAX: 0161 880 3981

PROJECT: BDG0054(M)

GLOSSOP STATION PLATFORM RESURFACING AND CANOPY WORKS

DRAWING TITLE

EXISTING CANOPY PLANS/ SECTIONS/ ELEVATIONS AND PROPOSED RAINWATER PIPE DETAILS

DESIGNER	ABU WADIE	SIGNED ABU WADIE	DATE 23/02/2011
DRAWN	ANDREW AINSCOUGH	SIGNED ANDREW AINSCOUGH	DATE 23/02/2011
CHECKED	STEVE ELLIS	SIGNED STEPHEN ELLIS	DATE 23/02/2011
APPROVED	JOHN WINSTANLEY	SIGNED JOHN WINSTANLEY	DATE 23/02/2011
SCALE(S) AT A1 SHEET SIZE 594 X 841	1:10, 1:20, 1:25, 1:100	ELR & MILEAGE	GDW 0 MILES 01 YARDS
DRAWING NUMBER	BDG0054(M)/DRG/A004	REVISION	C01