PLAN

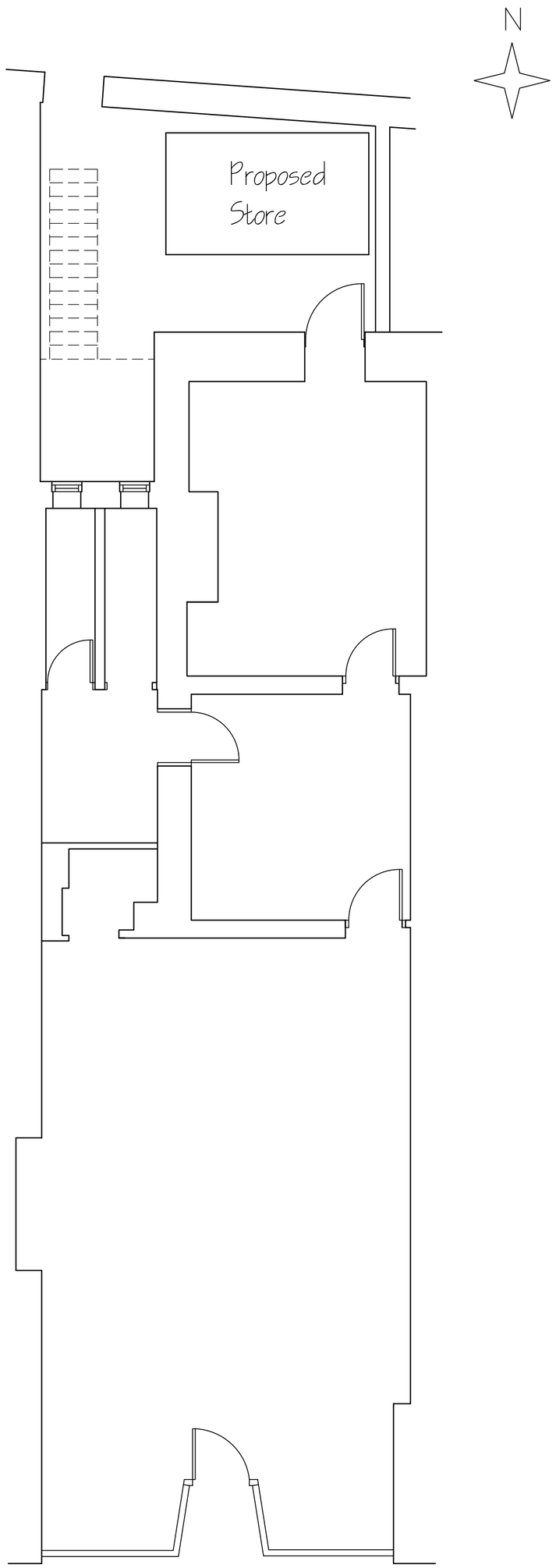

FRONT ELEVATION

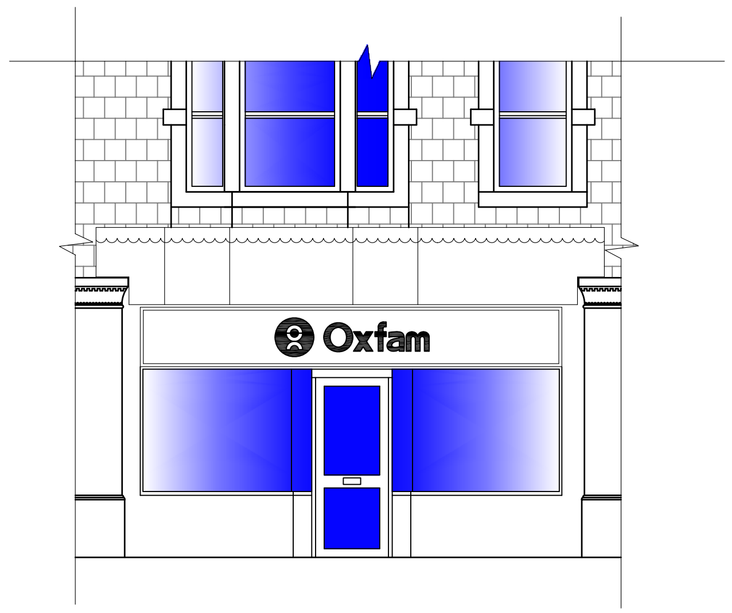

STORE FRONT ELEVATION & SECTION

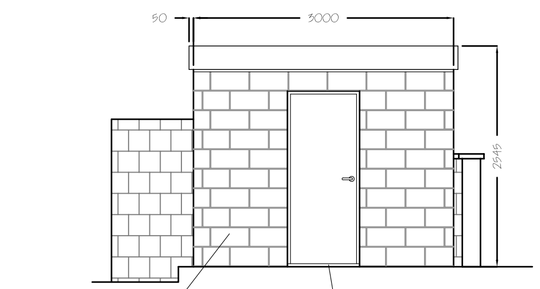

100mm fairfaced dense concrete block with 1 mist coat and 2 fullcoats of masonry paint finish (colour 113A)

High security doorset, contractor to provide details. Use standard duty 'L' lintel over opening to support blockwork.

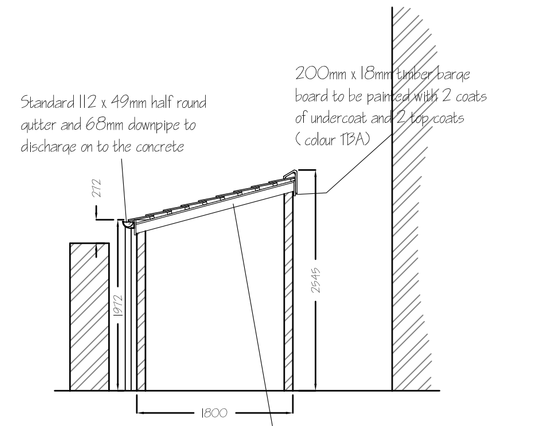

100mm x50mm treated timber joists at 600mm centres with 18mm WBP plywood sheeting fixed to joists and vapour permeable underlay laid over. 50mm x 25mm treated timber battens to be fixed at 210mm centres. Cambrian Slates (slate grey) must be laid broken bonded, from right to left. At right-hand verges, use Standard Slates and Slate-and-a-halves in alternate courses. At left-hand verges, use Left-hand Verge Slates and Left-hand Verge Slate-and-a-halves in alternate courses. At side abutments, allow for cover flashing and secret gutter. All Cambrian Slates must be twice nailed and once clipped. Universal Angle Monoridge Tiles in Slate Grey,to be fitted along the ridge with Universal Angle Block End Monoridge Tiles at the ends. Fit Ambi-Dry Verge System along the verge at both sides.

REAR ELEVATION (inside boundary wall)

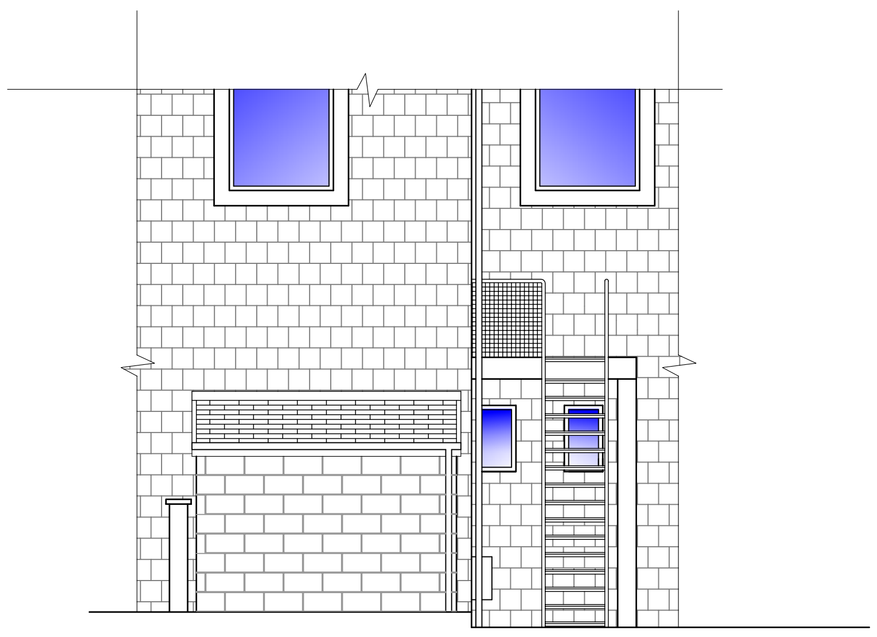

REAR ELEVATION (outside boundary wall)

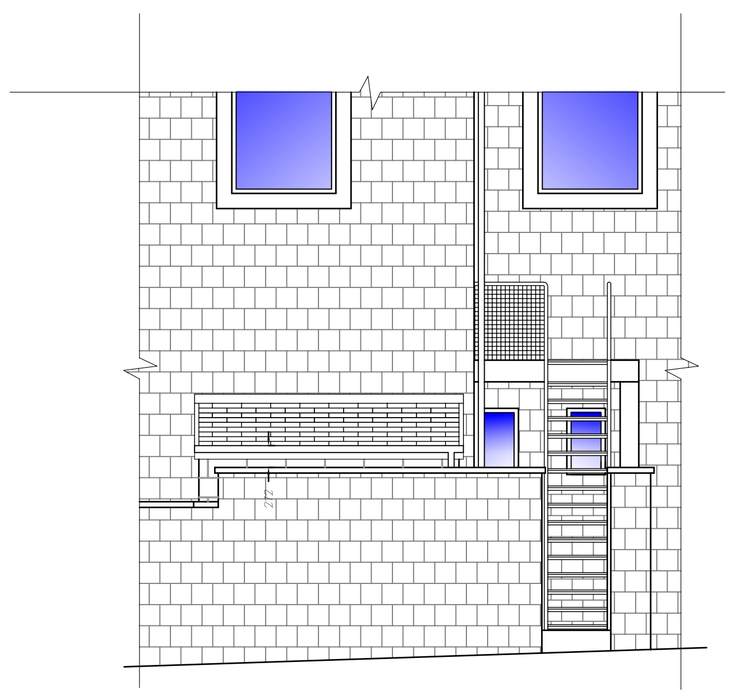

Date	Amended
Drawing Approved By	Suggested Amendments

Revisions :

Oxfam

BUILDING SURVEYORS OFFICE
2ND FLOOR
BARNBY HOUSE
BARNBYGATE
NEWARK
NOTTS
NG24 1PZ
Tel 01636 611566
Fax 01636 610056

JOB

External Store

DRAWING TITLE

Proposed Plans & Elevations

SITE

93 Spring Gardens, Buxton. SK17 6BP

SCALE @ A1	DATE	DRAWN
1: 50	July 11	PJR

CAD REF:

Buxton planning 2011.dwg

DRAWING NUMBER:	REV:
OxBuxton/ 02	A