HPK/2011/0481

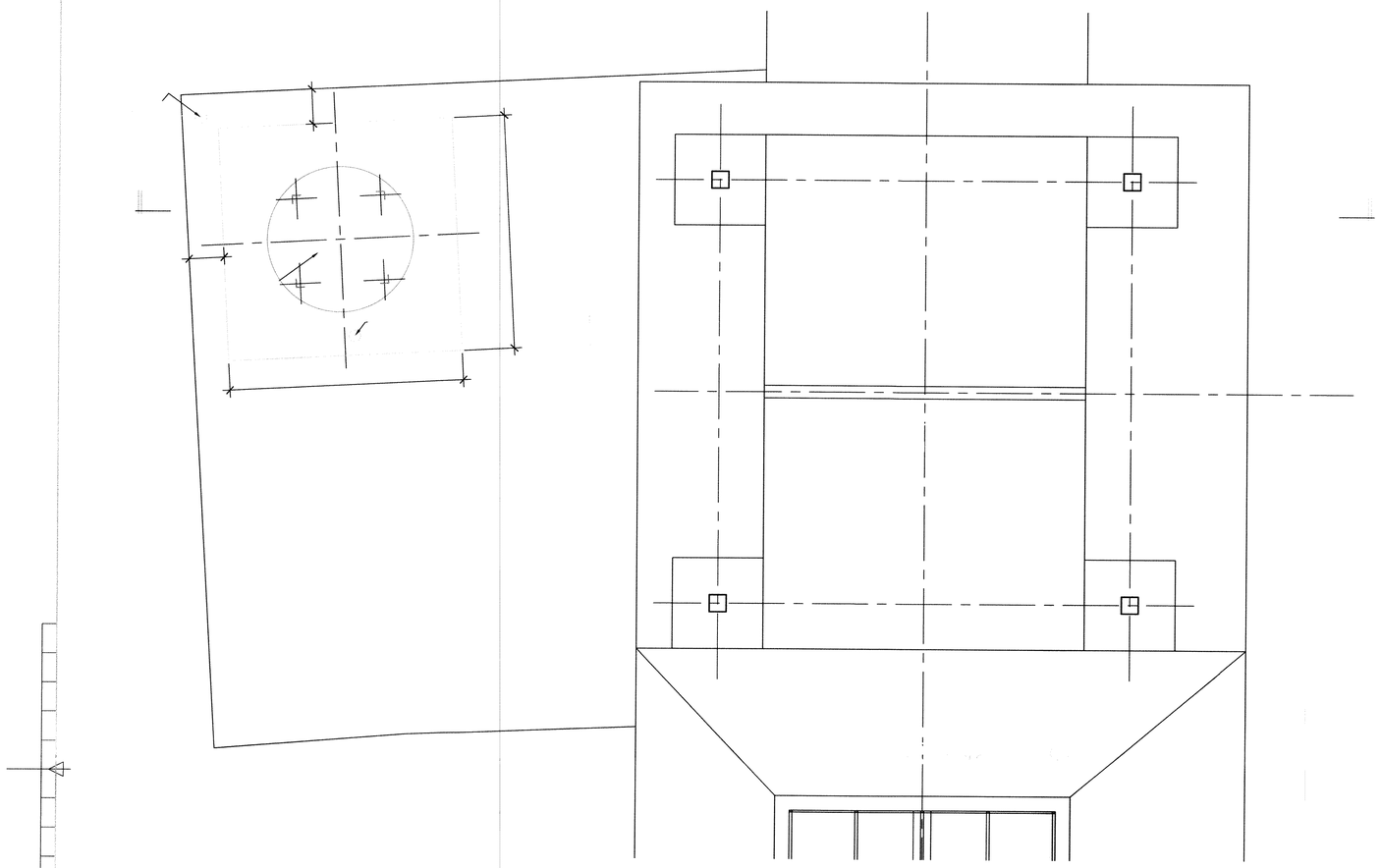

LIGHTNING PROTECTION
PERFORMANCE OBJECTIVES

The Contractor shall employ a specialist to design, supply, install, test and commission a lightning protection system.

DESIGN PARAMETERS

The lightning protection system shall be installed, tested and commissioned in accordance with BS EN 62305 Series.

DESCRIPTION

Earth termination network (Type B Arrangement) :

Type B earth electrode arrangement shall be provided.

Copper conductors shall be bonded to the vessel support steelwork . A copper ring earth electrode shall be provided around the periphery, interconnecting the copper bond earth terminations. Each point of connection shall be housed in a purpose built lockable inspection pit or chamber to be incorporated in the external paved / hard standing areas.
The ring earth electrode shall be in contact with the surrounding soil for a minimum 80% of its total length.

Materials:

To ensure an effective system and satisfactory long term performance, all fittings shall be mechanically robust and provide corrosion resistance qualities to suit the environment.

COMMISSIONING REQUIREMENTS

The Scope of the Works shall include the supply, installation, testing and commissioning of the individual associated items of plant, the system as a whole, including interfacing with other Contractors.

SPECIALIST

W. E. HARRISON
(Sheffield) Ltd
33 Regent Terrace SHEFFIELD S3 7QA
· Telephone (0114) 272 0561· Fax (0114) 272 0564 ·

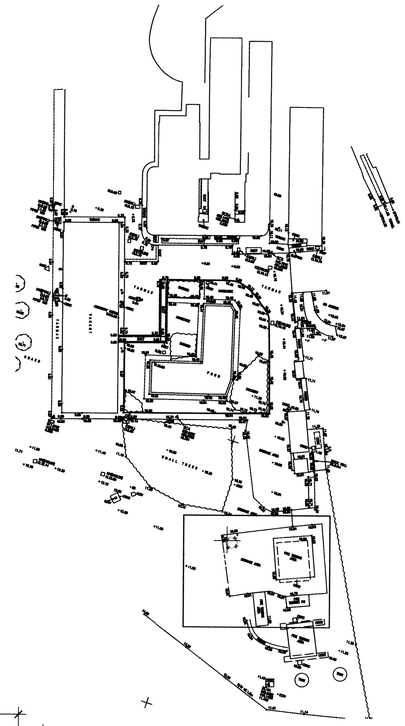

PROPOSED
LOCATION

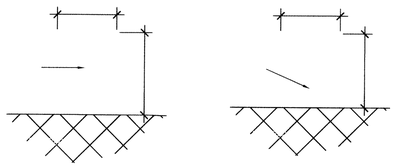

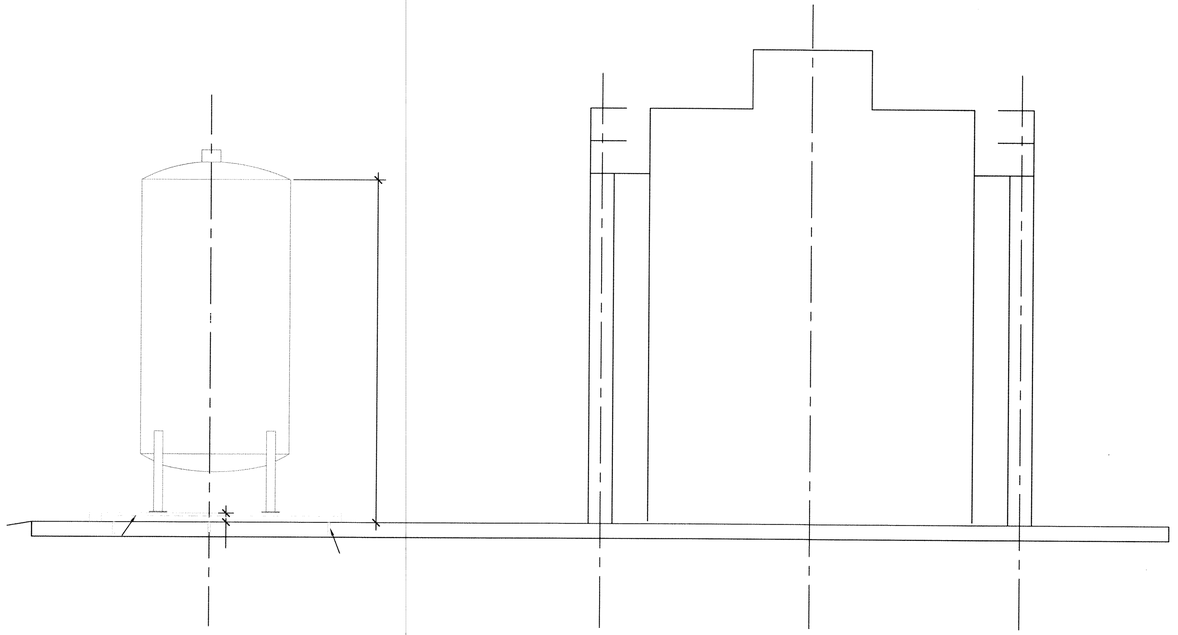

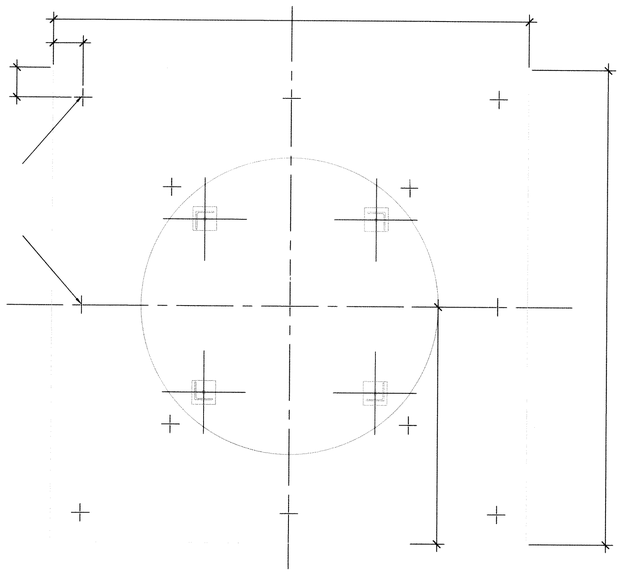

BUILDING DESIGN PARTNERSHIP SHALL HAVE NO RESPONSIBILITY FOR ANY USE MADE OF THIS DOCUMENT OTHER THAN FOR THAT WHICH IT WAS PREPARED AND ISSUED.

ALL DIMENSIONS SHOULD BE CHECKED ON SITE.

DO NOT SCALE FROM THIS DRAWING.

ANY DRAWING ERRORS OR DIVERGENCES SHOULD BE BROUGHT TO THE ATTENTION OF BUILDING DESIGN PARTNERSHIP AT THE ADDRESS SHOWN BELOW.

NOTES

GENERAL

BASIS OF DESIGN

The tank is expected to be on site for a period between 6 and 12 months.

The tank is to be located on an existing concrete slab of unknown quality.
The contractor should allow for taking two number 200mmØ cores to expose the subbase.
This will then be inspected by BDP.

WORK: All work to be in accordance with Air Products standard details.

LOCATION: Refer HSL for proposed slab location.

CONCRETE

Concrete to be grade RC28/35.
cover 50mm

Worked finish trowel float.

Formed finish basic.

Area to be checked by contractor for services before work commences.

THE CONTRACTOR SHOULD NOTE:
In accordance with HSL's Environmental Management System, all waste materials are to be disposed of appropriately via LICENSED WASTE DISPOSAL FACILITIES using licensed waste carriers OR preferably reused or recycled appropriately
e.g. inert construction rubble can be used as hardcore for other construction activities.
IN ALL CASES, copies of waste transfer notes or, if available, weighbridge notes are to be returned to the HSL to facilitate the recording of qualitative and qualitative waste data in accordance with GOVERNMENT WASTE REDUCTION TARGET REQUIREMENTS.

CONCRETE SLAB AND SUBBASE INSPECTED BY BDP AND MEASURED AS 250mm MIN WITH A LIGHT MESH.
SLAB THICKNESS REDUCED TO GIVE TOTAL BUILD UP OF 400mm MIN.
THIS IS CONSIDERED SUITABLE TO SUPPORT THE PROPOSED VESSEL.

3 AUG 2011

REVISION / DESCRIPTION	DRAWN	CHECKED	DATE

BDP.

1 North Bank
Sheffield S3 8JY
United Kingdom
T +44 (0)114 273 1641
F +44 (0)114 228 9925
www.bdp.com

PROJECT TITLE
HSL BUXTON
LIQUID CA[illegible]

DRAWING TITLE
GENERAL [illegible]
PROPOSED [illegible]
NITROGEN [illegible]

SCALE @ A1
AS NOTED

DATE

PROJECT NUMBER P2004134

DRAWING No.

REVISION