

Front (North) Elevation.

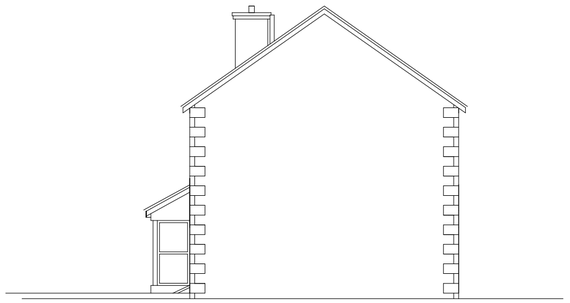

Side (East) Elevation.



Rear (South) Elevation.

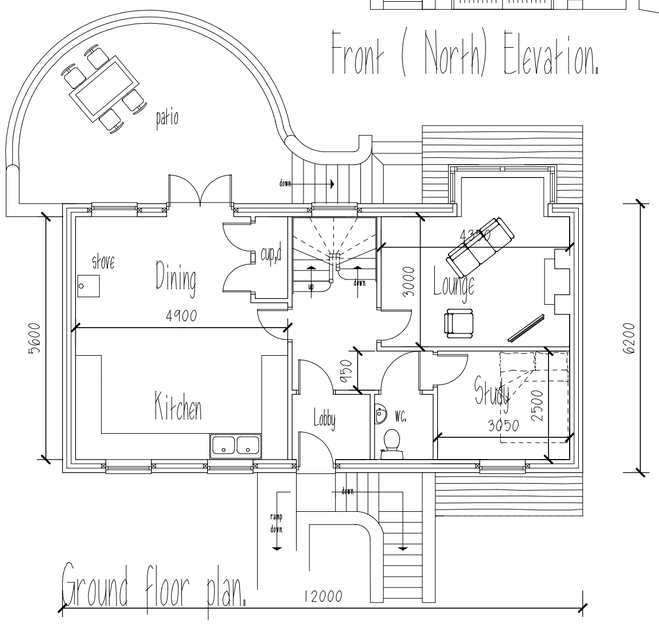

Ground floor plan.

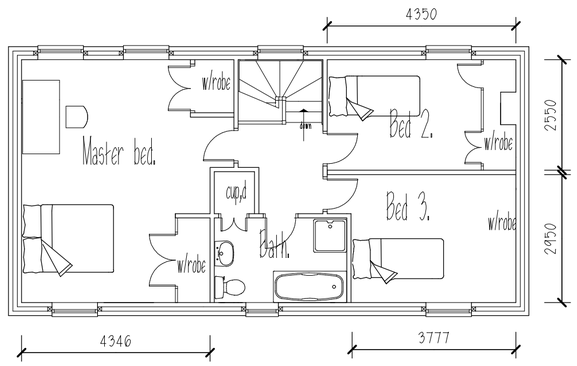

First floor plan.



Side (West) Elevation.

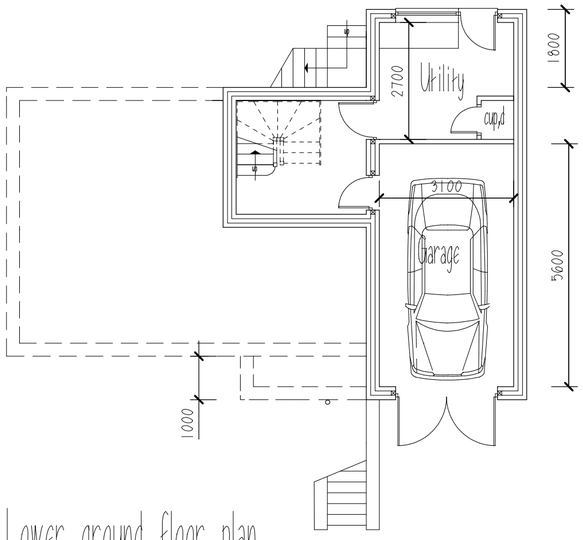

Lower ground floor plan.

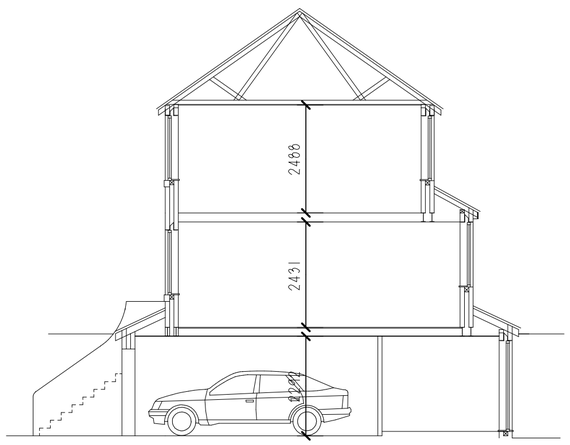

Section.

Walls: Artificial Gritstone.
Roof: Conc Tiles.
Doors/Windows: Brown PVCu.

THIS DRAWING IS NOT TO BE COPIED OR REPRODUCED
WITHOUT THE PRIOR WRITTEN CONSENT OF PLANMART LTD.

PLANMART

Client:

Mr & Mrs Domakin,
189 Sheffield Road, Glossop. SK13 8QX.

Project:

Proposed detached dwelling at rear of No,s 2 & 4 Pyegrove, Glossop.

Title:

Plans, section and elevations. (planning drawing only).

Scale: 1:100. A2 sheet.

Drawn:	Date:
MH	June 2011.
Project no.: 2392	Drawing no.: 2392-1

PLANMART LIMITED
53A High St. West, Glossop,
Derbyshire SK13 8AZ.
Tel: 01457 863153 E mail: planmart@btconnect.com