18 AUG 2011
NMA/2011/0033

Existing

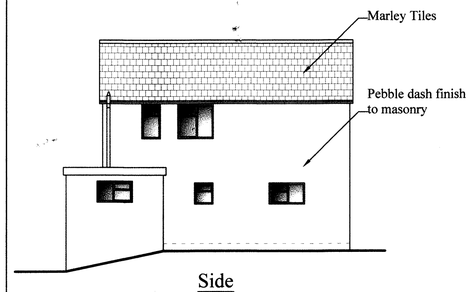

Side

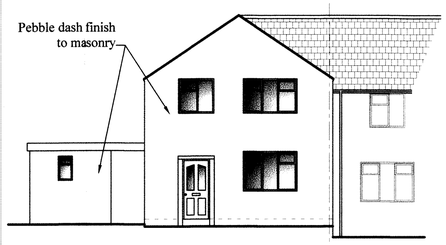

Front

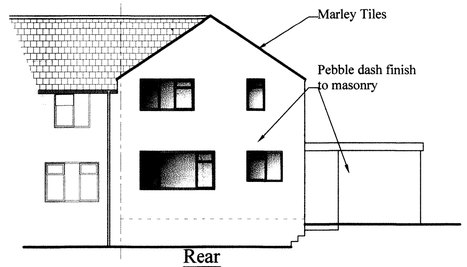

Rear

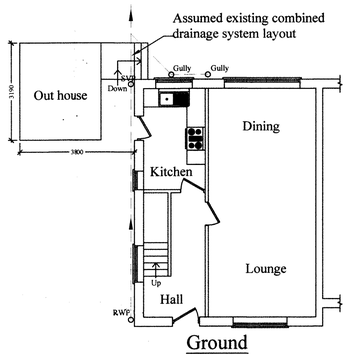

Ground

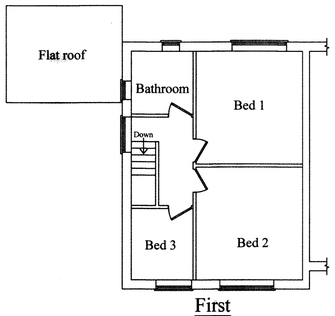

First

Proposed

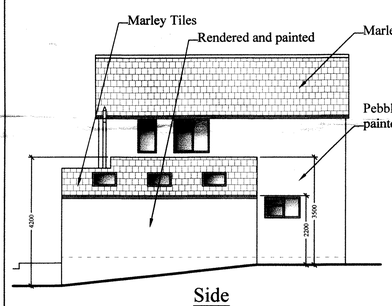

Side

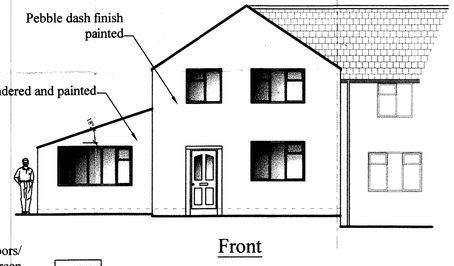

Front

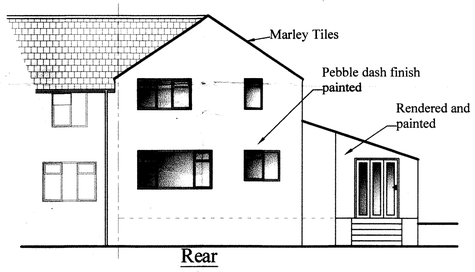

Rear

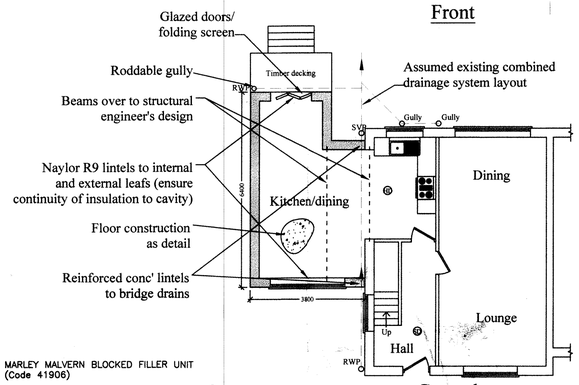

Ground

Key:
Interlinked smoke detectors (S)
Interlinked heat detectors (H)

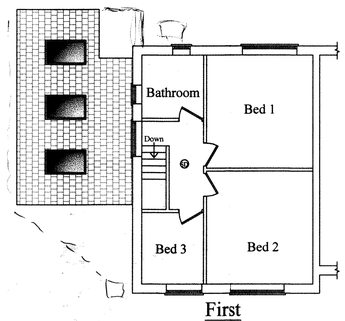

First

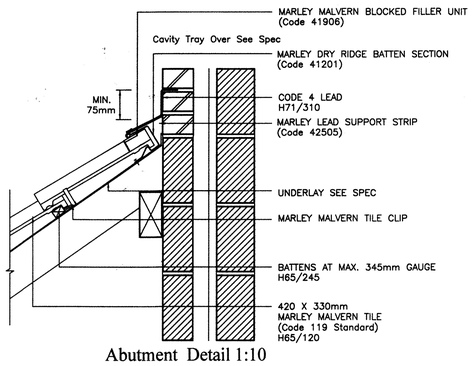

Abutment Detail 1:10

HPK/2010/0014.

Specification: Existing out house to be demolished and spoil removed off site to a licensed tip.

1. **New Roof to extension:**
- New roof pitch 18° as shown on elevation drawings
- At abutment hang off heavy duty galvanised steel joist hangers on a 150mm x 50mm C16 timber wall plate fixed to existing masonry with resin anchored M16 zinc plated bolts at 400mm min centres, staggered.
- Roof construction: Marley Malvern (smooth) tiles fixed in strict accordance with manufacturer's instructions (details enclosed) , 25mm x 50mm tanalised battens, Tyvek breathable sarking on 125mm x 50mm C16 rafters @ 400 centres (maximum span 2.67m) supported as shown on plan with steel purlin designed by structural engineer. Wall plate 100mm x 75mm preserved timber bedded and secured to inner block leaf with 30mm x 5mm x 1m long galvanised steel straps at 2m centres.
- **Lateral restraint:** Rafters strapped to walls and wall plate with 30mm x 5mm x 1m galvanised steel twist straps at maximum 2m centres. Gable walls to be strapped to rafters with 30mm x 5mm x 1m 'L' shaped galvanised steel straps at maximum 2m centers fixed into solid wall and fixed into first 3 rafters over noggins .
- **Roof insulation:** 100mm of Kingspan Kooltherm K7 Pitched Roof Board between rafters under battens with min 25mm air gap above insulation and a further 50mm fixed to underside of rafters (150mm total). 12.5mm plaster board with vapour control layer & skim to underside to form sloping ceiling.
- **Leadwork** to abutment code 4 flashing and soakers to BS1178 with min 150 upstand (cavity tray over at abutment).
- **Cavity trays:** All cavity trays by 'Cavity Trays' of Yeovil; Type E for abutment with 150mm upstand.

2. **Structural Steel:** Any structural steelwork to be designed by structural engineer. Note: Any steel beams to have minimum 12.5mm fireline plasterboard and skim cover to achieve 1/2 hour fire resistance. Double boarding of fireline may be required to achieve ½ hour fire resistance depending on Hp/A factor of boards and manufacturers guidance must be followed.
3. **Rainwater goods:** New rainwater goods to be black uPVC to match existing to fall to existing combined drain. 63 dia RWP, 100 dia eaves gutter,
4. **Drainage:** Drainage layout shown is assumed. Any new drainage via uPVC 100mm pipe to BS4660 packed in granular fill laid to min 1:40 fall with rodding points to gullies and any new drains where there is a change of direction. 75mm deep seal traps on all appliances. Any drainage work to be inspected and approved by Building Control before back filling. 100mm plastic waste to toilets, 40mm plastic waste to sinks and baths (with 75mm deep seal traps) to discharge to existing combined drain. Rodding access to be provided to all changes in direction and bases of soil stacks.
5. **Ground floor/Foundation details:** See detail.
6. **Extension wall construction:**
- Outer leaf: 100mm 7 N/mm^2 thermal concrete blocks tied into existing dwelling using stainless steel starter strips @ 450mm centres with plastic movement sleeves, rendered and painted finish.
- Cavity: 100mm cavity with 50mm residual cavity between outer leaf and 50mm 'Kingspan Kooltherm K8' cavity board insulation. Cavity wall insulation slabs to commence below D.P.C. level to avoid thermal bridging at ground floor level. Cavity to have double triangle stainless steel wall ties between inner and outer leaf at 450mm centers vertically and 750mm centres horizontally, staggered across elevation.
- Inner leaf: 100mm 7 N/mm^2 thermal concrete blocks tied into existing dwelling using stainless steel starter strips @ 450mm centres with plastic movement sleeves, with 12mm backing plaster and skim to internal walls.
- Note - To prevent thermal bridging all new door and window openings must be closed with a 50mm 'Kingspan Kooltherm K8' cavity board insulation with a vertical D.P.C. '

7. **Heating & hot water:** Existing heating system extended and new radiators to have TRV's and sized and positioned by heating engineer to clients specification. All Gas and heating works to be carried out by a Gas Safe Registered installer.
8. **Ventilation:** Kitchen to have 60 litres/second mechanical ventilation. New windows to have 8000mm^2 trickle ventilation
9. **Electrical installation:** Electrical installation to BS 7671 to be checked by a NICEIC approved electrician. sockets to be located to occupiers specification. All electrical wiring to be designed, installed, inspected and tested in accordance with the requirements of BS 7671, 17th Edition wiring guidance and Building Regulation Part P (Electrical Safety) by a member of the Government's Compentant Persons Scheme and the competent person is to send to the local Authority a self certification certificate within 30 days of the electrical works completion. The client must receive both a copy of the Self Certification certificate and BS 7671 Electrical Installation Test Certificate.
10. **Lighting:** lighting to be energy efficient lamps.
11. **All duct work** to be insulated for sound.
12. **Smoke/heat detectors:** All detectors to be interlinked, mains powered with battery back up. Optical detectors to circulation spaces, ionisation type to habitable rooms to be fitted to ceilings located as shown.
13. **Joinery/Glazing** All new windows will be double glazed low E glass & argon filled to achieve a min U value of 1.8. Safety glazing to critical locations windows below 800mm and doors and side panels below 1500mm. Fascia boards and eaves detail to extension to match existing detail.

Ground Floor Construction Detail 1:10

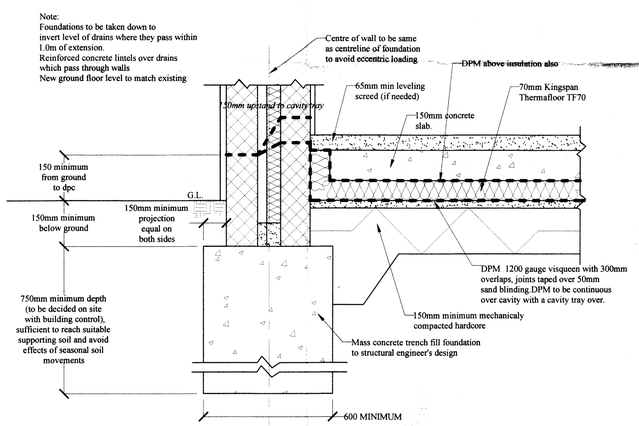

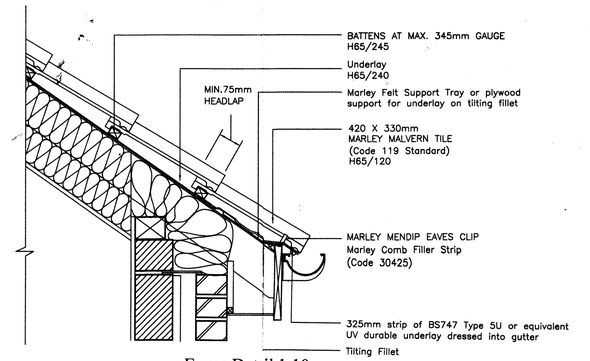

Eaves Detail 1:10

Building Regs Approved

This drawing is the Copyright of SJ Design Limited.
All dimensions must be checked on site and not scaled from this drawing.
All materials and workmanship are to be in accordance with prevailing British Standards, Codes of Practice, Building Regulations, manufacturers and federation recommendations and all to the complete satisfaction of SJ Design Limited.

SJ DESIGN LTD
Building Design & Surveying Consultants
The Old Workshop, 28A New Mills Road
Hayfield High Peak SK22 2 EU
Tel:01663 742903 Fax:01663 746686
Mobile: 07984 007 087 Email: info@sjdesign.net
www.sjdesign.net

Client
John Willets
Job Title
Proposed side extension at
10 North Road
Hayfield
Sk22 2HW

Drawing Title
Floorplans, elevations, and construction details as existing and proposed

Scale
1:100 @ A1 unless stated
Date
Jan 2010
Drawn by
SJ

Drawing No.
100
Rev.