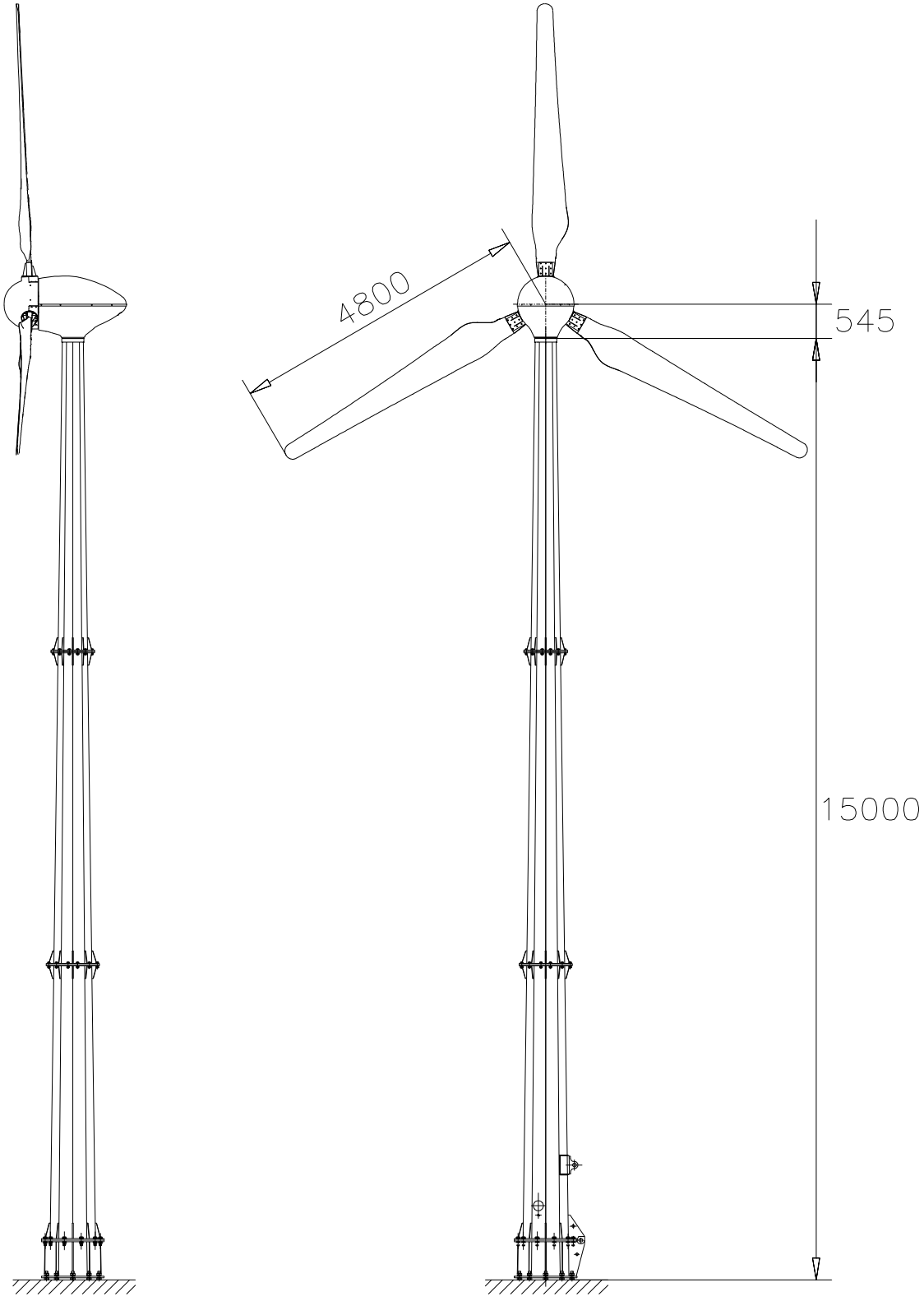

	NAME	DATE
DRAWN	BH	
CHECKED	SW	
ENG APPR.		
MFG APPR.		
Q.A.		
COMMENTS:		

TITLE: EVOCO 10kW WIND TURBINE 15m TOWER

Evoco Energy Ltd.
St Pegs Mill, Thornhill Beck Lane,
Brighouse. HD6 4AH. United Kingdom.
Tel: +44 (0) 1484 475 800 info@evocoenergy.com

All rights reserved

DIM	DWG. NO.	REV
mm	PL EVO10-15M	2.2

SCALE: 1:100	DATE: 27/05/2009	SHEET 1 OF 1