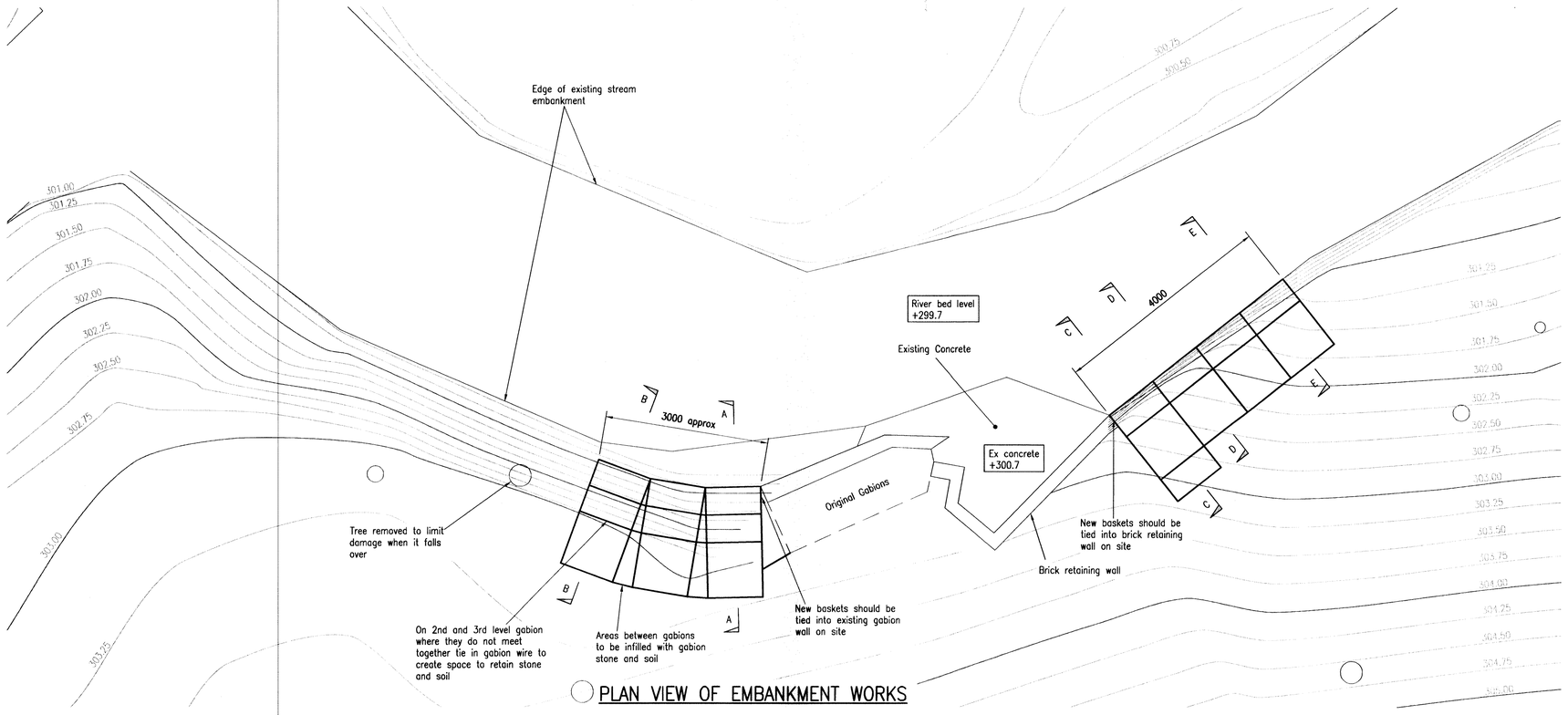


PLAN VIEW OF EMBANKMENT WORKS

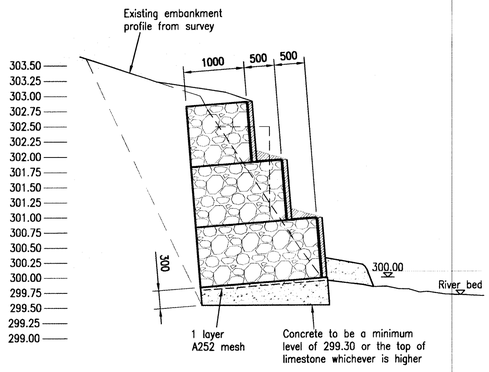


SECTION A–A

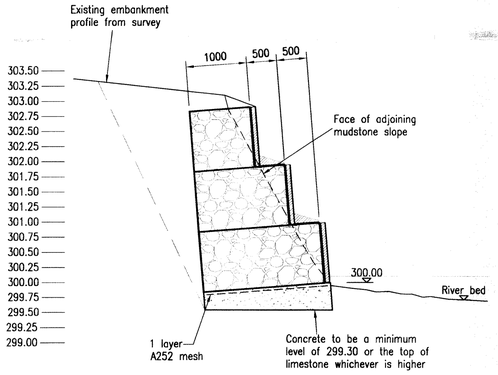


SECTION B–B

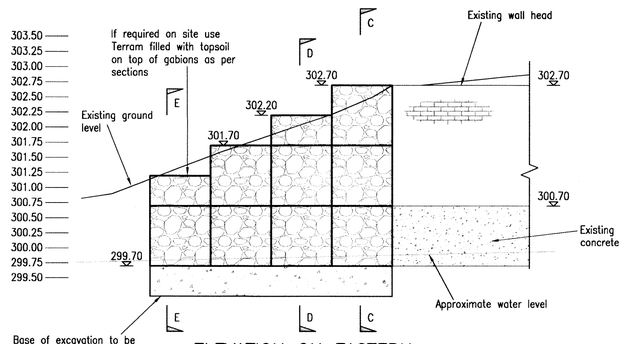


ELEVATION ON EASTERN RETAINING WALL

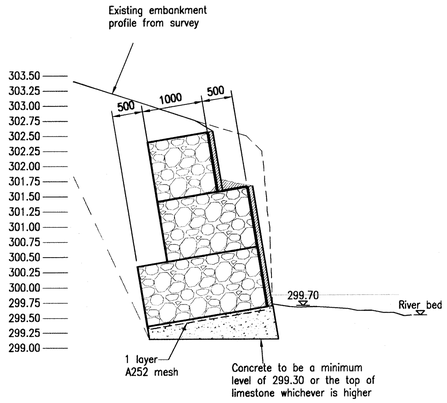


SECTION C–C

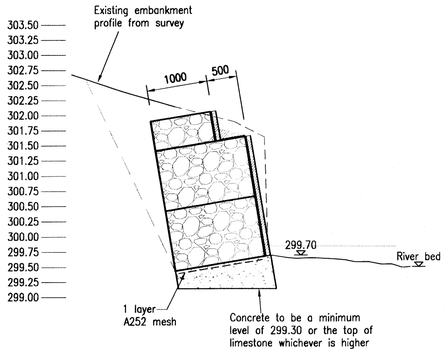


SECTION D–D

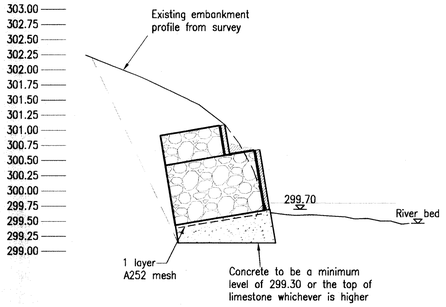


SECTION E–E

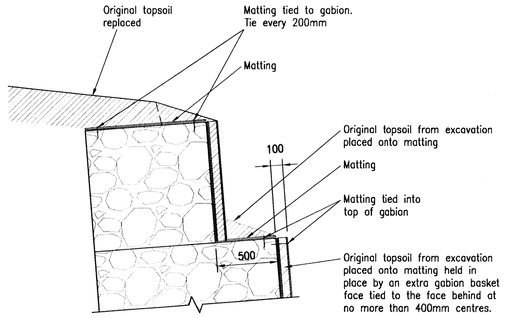


VEGETATION DETAIL

Information within this drawing is not necessarily produced to scale. Always use figured dimensions and co-ordinates – if in doubt, ask.

NOTES

NOTE:
Topographical information from Powers & Tiltman drawing ref. 0000, dated 0000.

| REV | DESCRIPTION | SIG | CHK | DATE |
|---|---|---|---|---|
| B | Design revised in accordance with EA requirements. | GB | JMW | 11.02.11 |
| A | First Issue. | | | |

TAYLOR WOODROW DEVELOPMENTS LTD

OTTERS BROOK, BUXTON

STREAM EMBANKMENT REMEDIATION

Eastwood & Partners
CONSULTING ENGINEERS
St. Andrew's House
23 Kingfield Road
Sheffield
S11 9AS
Tel 0114 255 4554
Fax 0114 255 4330
mail@eastwoodandpartners.com
www.eastwoodandpartners.com

| SCALE WHEN PLOTTED AT A1 | | | DRAWING STATUS | |
|---|---|---|---|---|
| 1:25 1:50 | | | PRELIMINARY | |
| DRAWN | CHECKED | DATE | DRAWING NUMBER | REV |
| GB | KG | 11.11.10 | 33232/001 | B |