EYEBALL DOME CAMERA

COLOR 1/3” 540 TV LINES SONY SUPER HAD CCD CAMERA

Getting to Know Your Camera

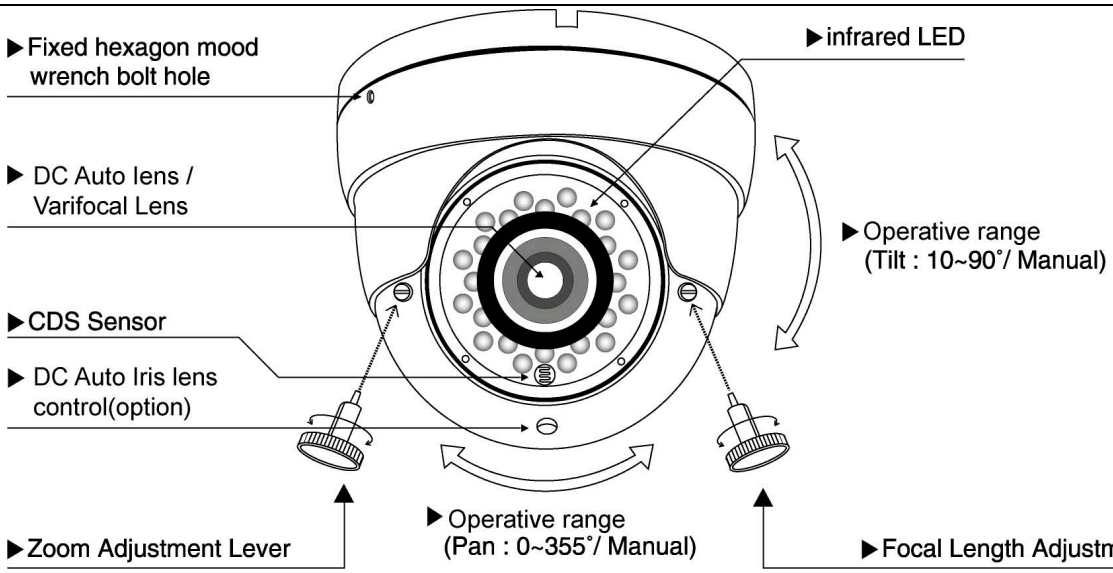

Tele : To zoom in, turn the Zoom Adjustment lever clockwise
Wide : To zoom out, turn the Zoom Adjustment lever counterclockwise.

Adjusting by lever,focal length can be changeable.

Specifications

Image Pick-up Device	**1/3” Sony Super HAD CCD**
Total Pixels	**811(H) * 508(V) NTSC, 795(H) * 596(V) PAL**
Effective Pixels	**768(H) * 494(V) NTSC, 752(H) * 582(V) PAL**
Scanning System	**[2:1 interlaced (NTSC) 525 lines / (PAL) 625 lines**
Scanning Frequency	**[NTSC : 15,734KHz (H) / 59.94Hz] / [PAL : 15,625KHz (H) / 50Hz]**
Shutter Speed	**1/60~ 1/100,000 NTSC, 1/50~1/100,000 PAL**
Sync System	**Internal**
Resolution	**More than 540 TV Lines**
Video Output	**VBS 1.0V p-p Composite (75Ω)**
White Balance	**ATW**
BLC	**ON / OFF**
Flickerless	**ON / OFF**
AGC	**ON / OFF**
S/N Ratio	**More than 48dB**
Minimum Illumination	**0 Lux for Infrared Lighting Conditions**
IR Range	**20M**
LED Quantity	**24PCS**
Lens	**4~9mm DC Auto Iris Lens**
Operating Temp	**-10℃ to 50℃**
Power Consumption	**DC 12V 130mA (CDS ON : 420mA)**
Dimensions	**127(W)mm x 96(D)mm**
Weight	**Appx. 800g**

※ DESIGN AND SPECIFICATIONS ARE SUBJECT TO CHANGE WITHOUT PRIOR NOTICE.

Mounting & Dimension

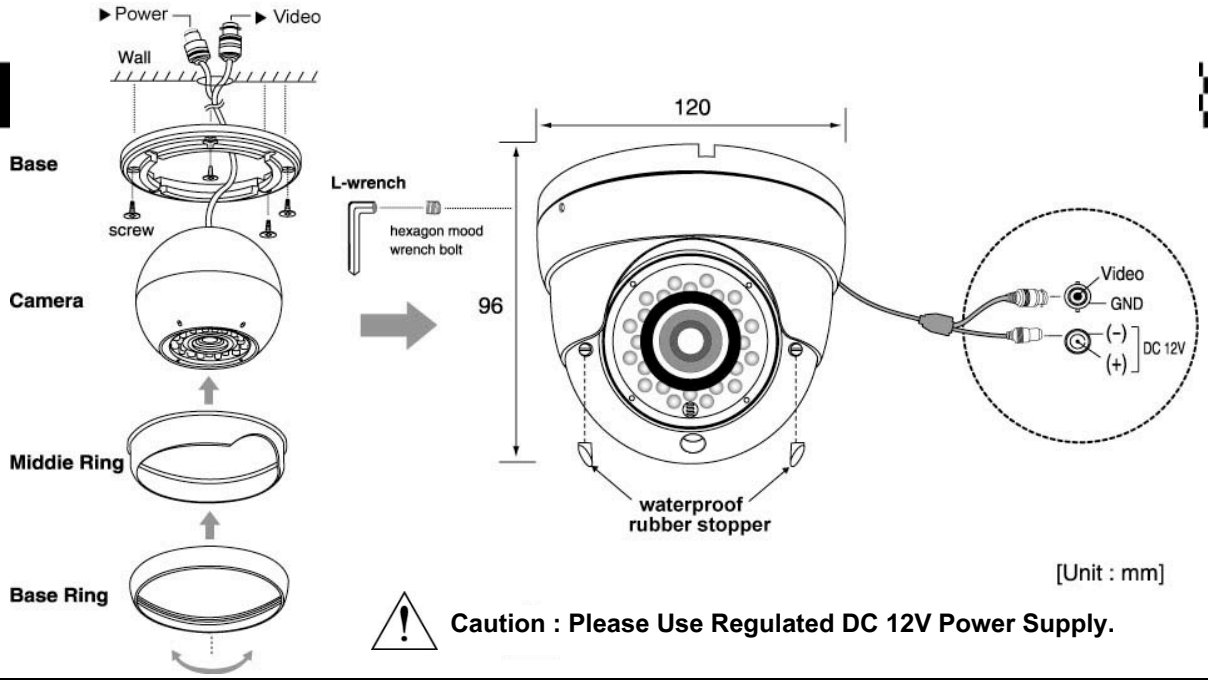

[Unit : mm]

Caution : Please Use Regulated DC 12V Power Supply.

Accessories

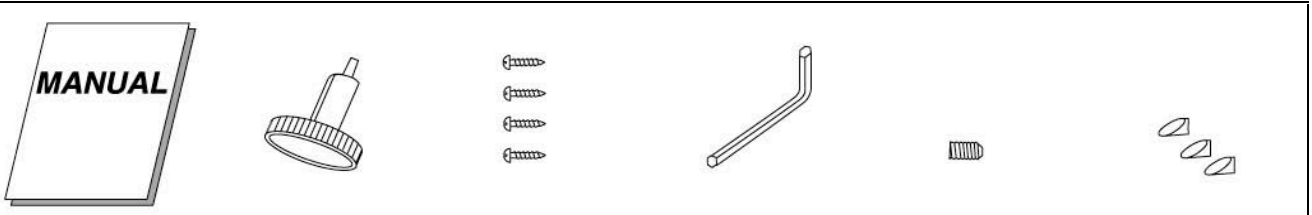

▶User's Manual ▶Tool Lever ▶Screw for fixing ▶L - Wrench ▶hexagon mood wrench bolt ▶waterproof rubber stopper

Warranty

1. Products are supplied with 1 year limited warranty from the date of purchase.
We will repair or replace the defective item with a new or factory rebuilt replacement.
2. Transportation of the product to our service center is the responsibility of the user.
Repaired or replaced product will be returned prepaid during the warranty period.
3. This warranty applies to the original purchaser only.
4. This warranty will be invalid if unauthorized repair or modification are made to the unit or in any
case of accident, misuse or damage caused by improper installation or altered serial numbers.
5. The liability of the company has limited the cost of repair/replacement of the unit under warranty.
6. If you need warranty service, you should send the product to the company customer center or dealer's office.
The product in all cases must be accompanied by the following warranty card.

PRODUCT NAME			WARRANTY YEAR
DATE OF PURCHASE	/DAY /M /Y		1 YEAR
WARRANTY DATE			
ADDRESS OF CUSTOMER		NAME	
		TEL	
CONTACT		NAME	
		AGENT	
		TEL	

- Please read the instruction manual again before asking for the A/S
- Please explain exactly what the problem you have is,