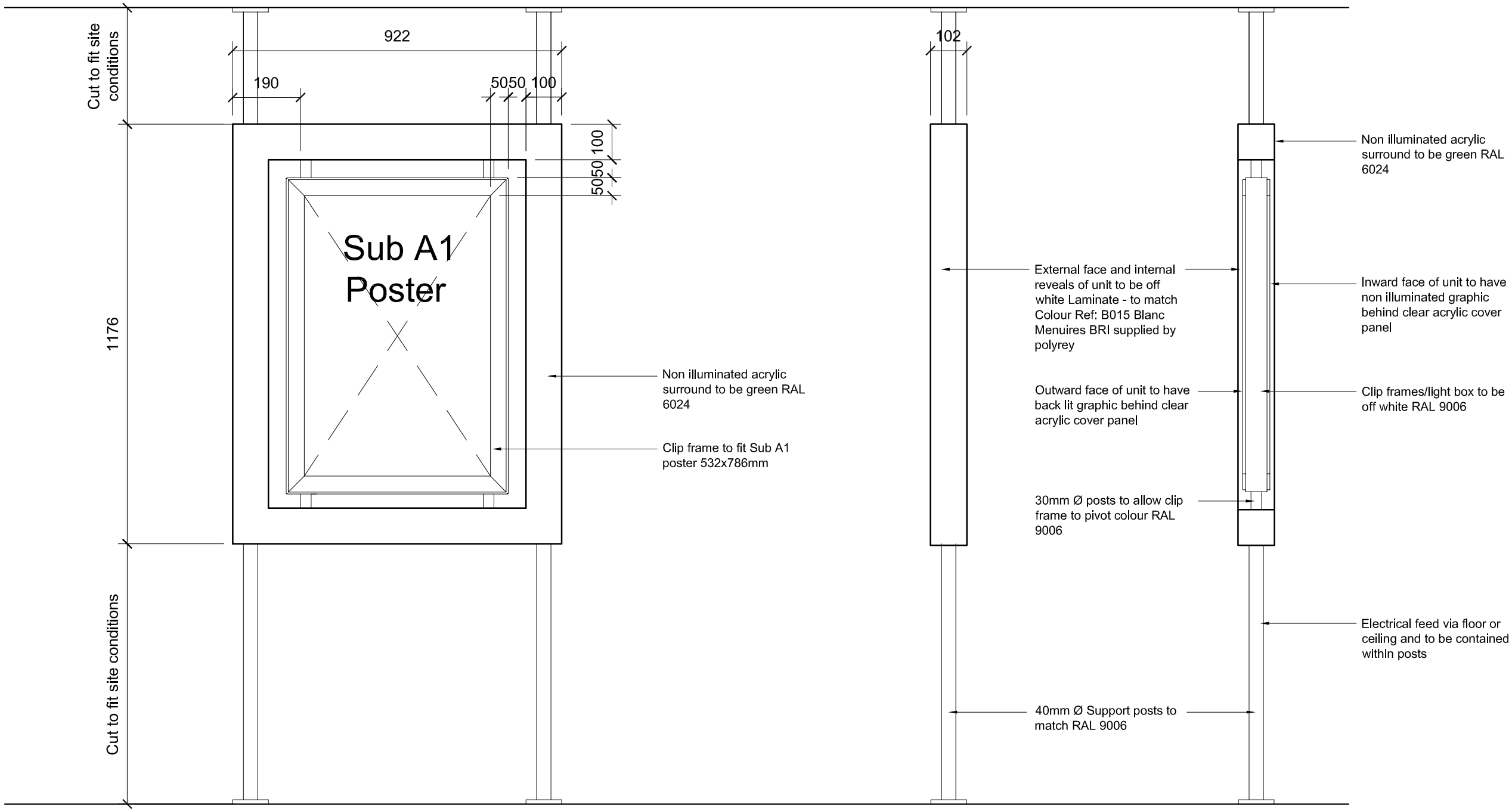

Front Elevation

Side Elevation

Section

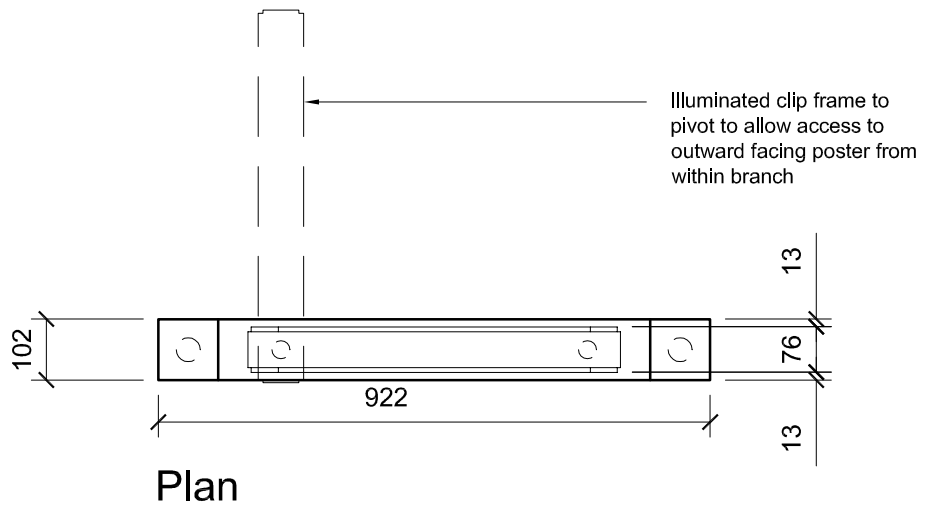

Plan

REV	DATE	INIT	REVISIONS

Lloyds TSB

Group Property Management

Lloyds TSB Bank plc, Group Property Management
PO Box 112, Canons House, Canons Way
Bristol, BS99 7LB

THIS DRAWING IS TO BE READ IN CONJUNCTION WITH THE PROJECT SPECIFICATION. ANY DISCREPANCIES MUST BE REPORTED TO THE C.A. THIS DRAWING IS IN MILLIMETRES. WORK TO FIGURED DIMENSIONS ONLY. DO NOT SCALE.

DRAWING No.	REV
60 2203	-

DATE	SCALE	DRAWN
24/11/08	NTS	GPM

DESCRIPTION

Fixed Frame Hinged Lightbox
Window Merchandising unit
Sub A1 Portrait
-