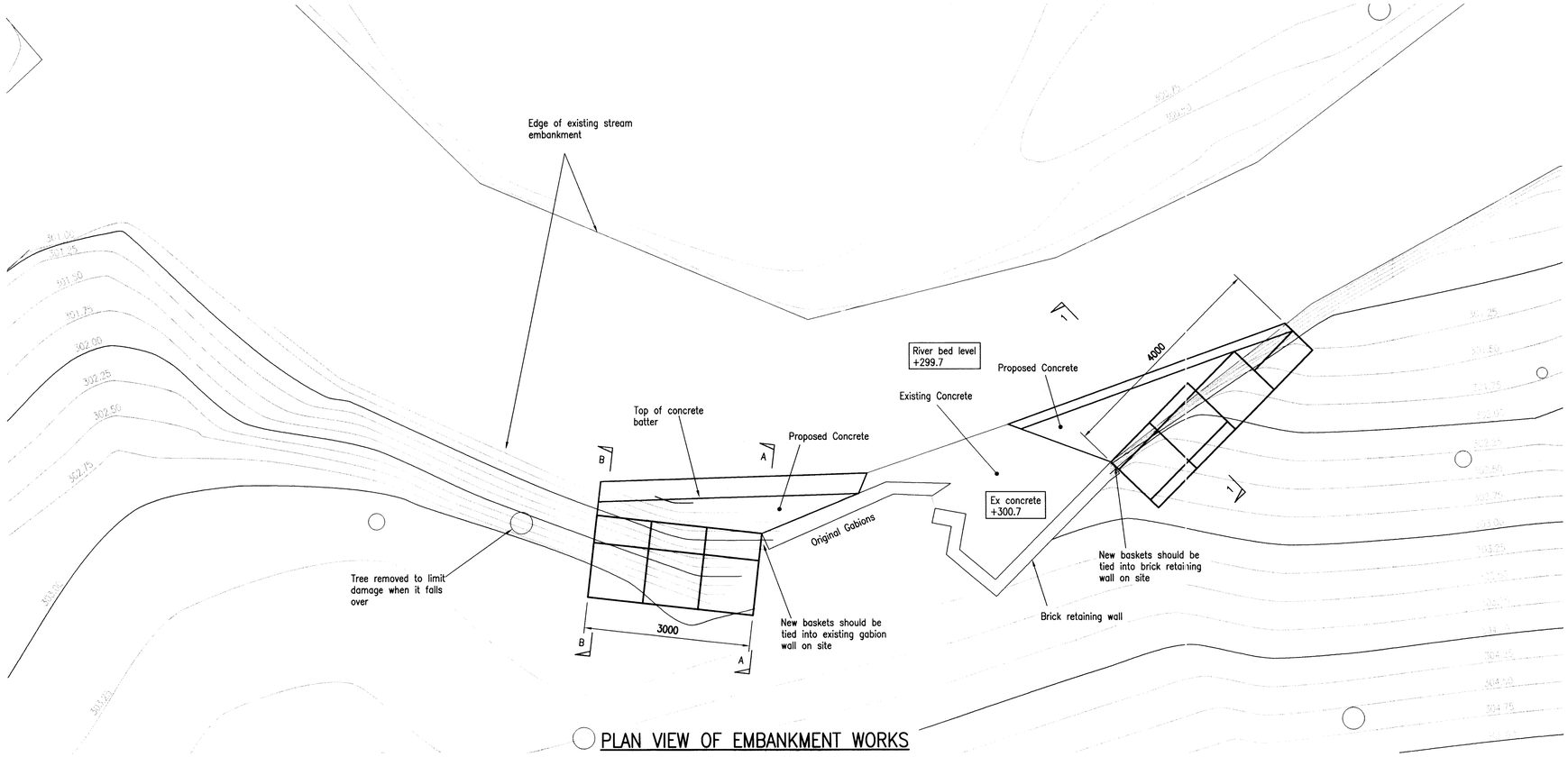

PLAN VIEW OF EMBANKMENT WORKS

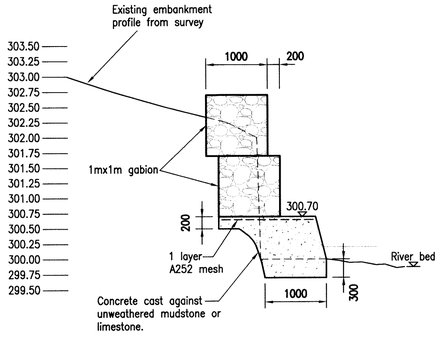

SECTION 1–1

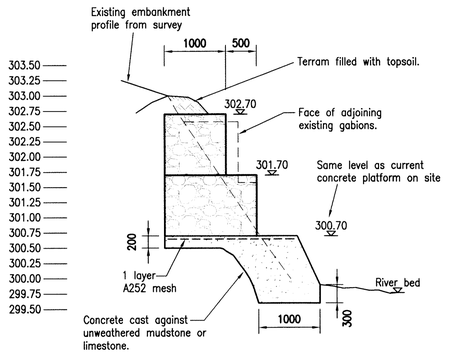

SECTION A–A

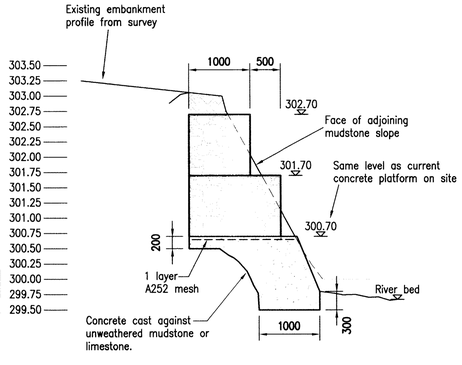

SECTION B–B

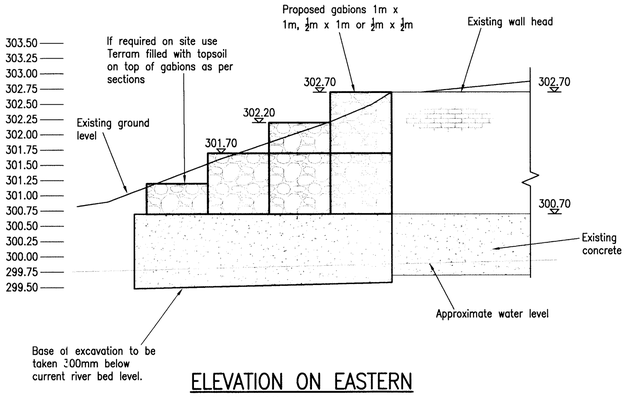

ELEVATION ON EASTERN RETAINING WALL

Information within this drawing is not necessarily produced to scale. Always use figured dimensions and co-ordinates – if in doubt, ask.

NOTES

PEAK PARK PLANNING BOARD
GLOSSOP SITE
RECEIVED
13 JAN 2011
FILE NO.
REPLY REQUIRED

REV	DESCRIPTION	SIG	CHK	DATE
A	First Issue.			

TAYLOR WOODROW DEVELOPMENTS LTD

OTTERS BROOK, BUXTON

STREAM EMBANKMENT REMEDIATION

Eastwood & Partners
CONSULTING ENGINEERS
St. Andrew's House
23 Kingfield Road
Sheffield
S11 9AS
Tel 0114 255 4554
Fax 0114 255 4330
mail@eastwoodandpartners.com
www.eastwoodandpartners.com

SCALE WHEN PLOTTED AT A1	DRAWING STATUS
1:50	FOR CONSTRUCTION

DRAWN	CHECKED	DATE	DRAWING NUMBER	REV
GB	KG	11.11.10	33232/001	A