Sign Type PC - Construction details

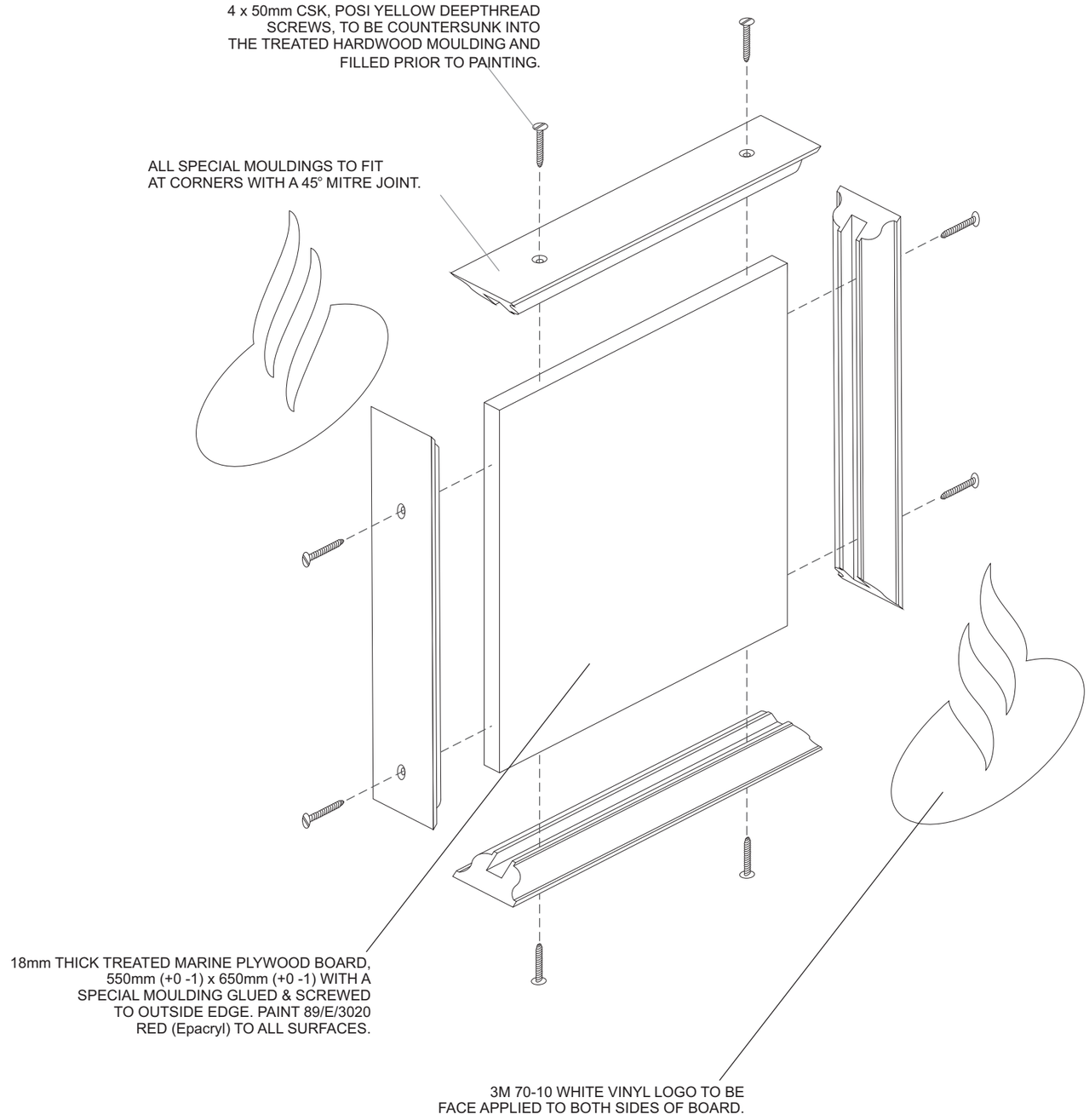



STANDARD ALUMINIUM EXTRUDED T-SECTION CUT TO 30mm SECTIONS AND FIXED TO THE TOP OF THE PROJECTION SIGN WITH 4 x 25mm COUNTERSUNK SCREWS. POWDER COAT BLACK RAL 9011.

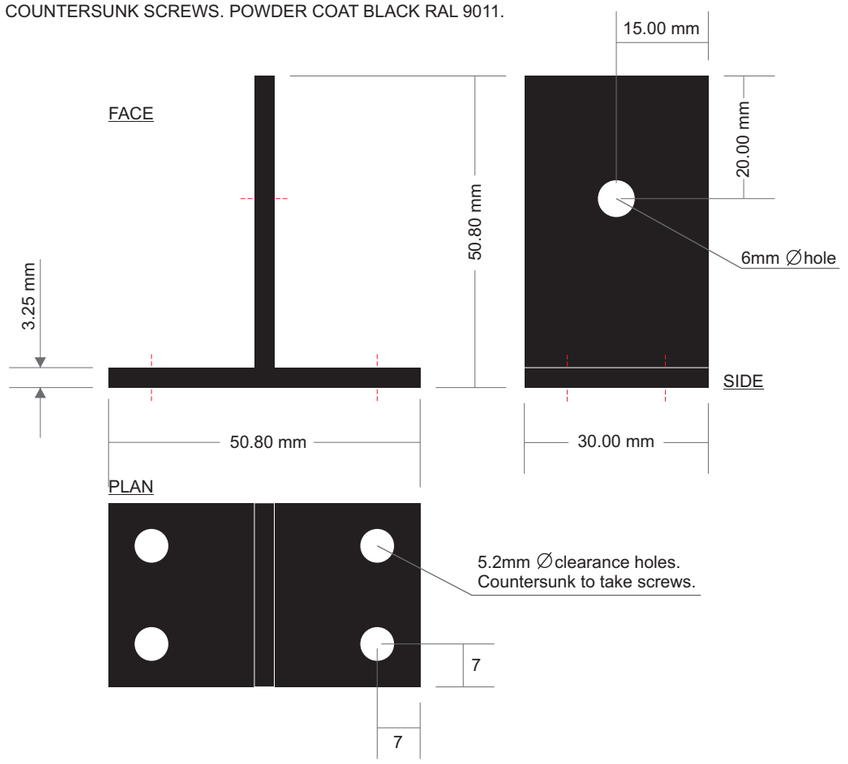

©Copyright 2009 Insignia Projects Limited. This document is not to be copied, adapted or distributed without prior written consent from Insignia Projects Limited