Sign Type P2 - Construction details
Scale 1:10 @ A3

Hanging sign detail

This Sign Type has 3 possible panel options (see separate detail re panel types A, B & C)

P2A: Aluminium panels with acrylic logo
P2B: Aluminium panels with vinyl logo
P2C: Timber panel with vinyl logo and decorative frame

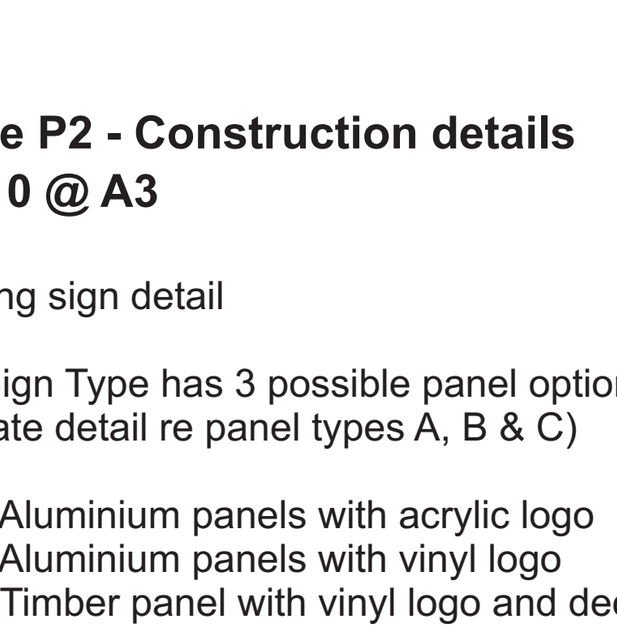

Sign Type P2 - Bracket Construction details

Hanging sign detail - Non Illuminated.

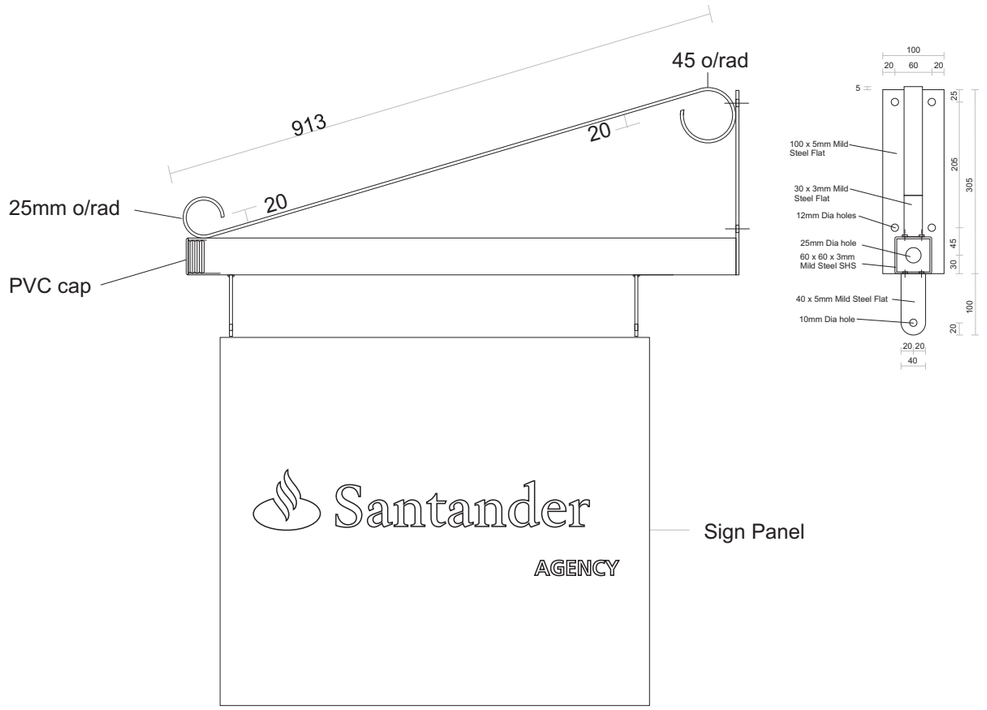

Lug positions	65	655	168
Overall bracket		893	5

©Copyright 2009 Insignia Projects Limited. This document is not to be copied, adapted or distributed without prior written consent from Insignia Projects Limited