Track detail section 1

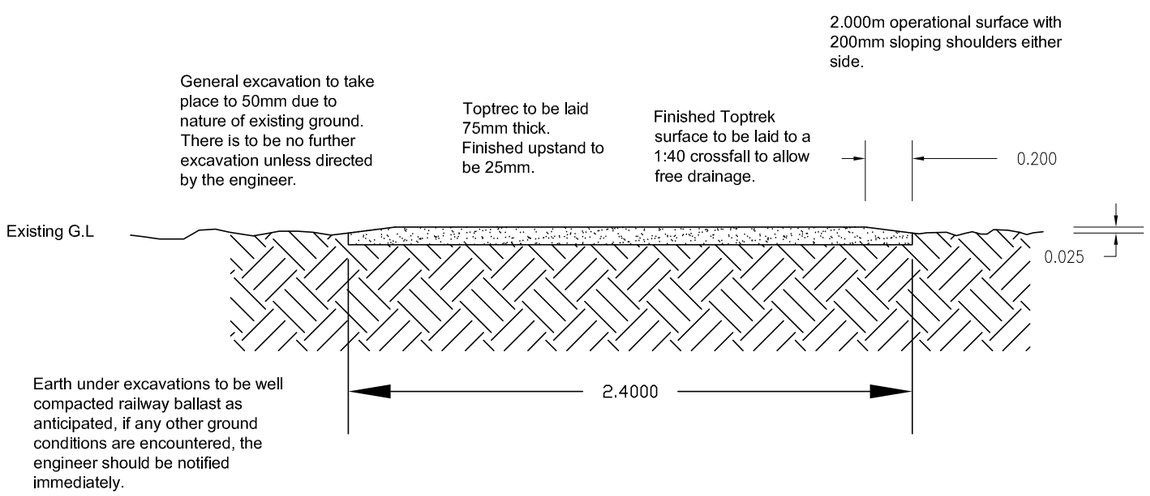

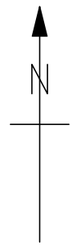

DRAWING KEY

- Earth compacted according to specification
- Tarmac Toptrec surfacing material to be laid 75mm thick
- Granular sub base type 1 or similar approved material to be laid 175mm thick in areas directed by engineer

This map is based upon Ordnance Survey material with the permission of Ordnance Survey on behalf of the Controller of Her Majesty's Stationery Office © Crown Copyright. Unauthorised reproduction infringes Crown copyright and may lead to prosecution or civil proceedings. Derbyshire County Council LA076554 2006.

Track detail section 2

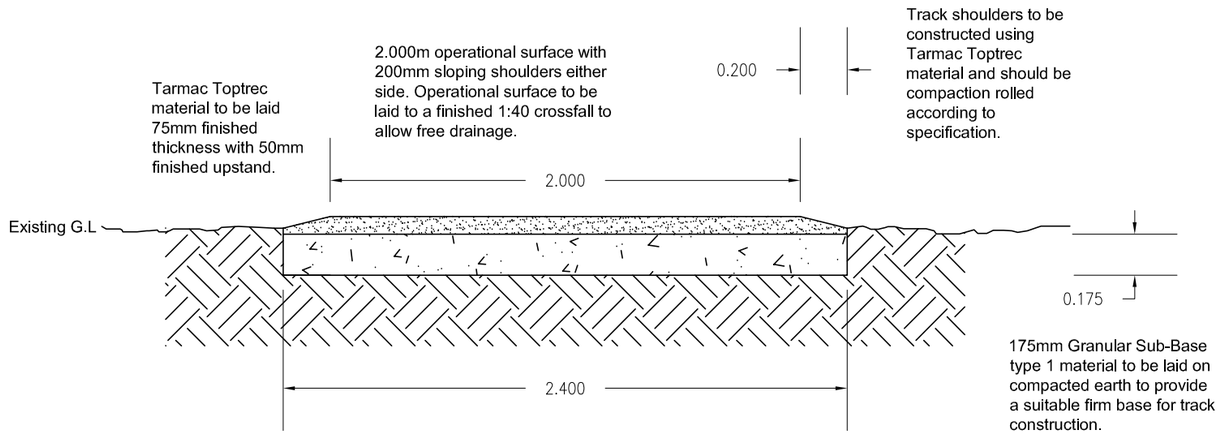

AMENDMENT DETAILS	BY	CHKD	APVD	DATE	NO.

DRAWN	CHECKED	APPROVED
A SPENCER	A MEHTA	P STOREY
Date 25/6/10	Date 13/08/10	Date 13/08/10

DERBYSHIRE County Council

IAN STEPHENSON
Strategic Director – Environmental Services

DERBYSHIRE CONSULTING ENGINEERS

ISO9001

PROJECT TITLE
SHALLCROSS INCLINE

DRAWING TITLE
GREENWAY CONSTRUCTION DETAILS

DCE Project Reference No.	9316	SCALE
Drawing Number	9316/1/005	NTS

XREFS:

ORIGINAL DRAWING SIZE 420 x 297 (A3)

COMPUTER REFERENCE : K:\Environment-and-Transport\Reclamation\9316 Shallcross Incline – Whaley Bridge\Drawings\AutoCAD Drawings\Planning Drgs\9316-1-005 TRACK DETAILS.dwg