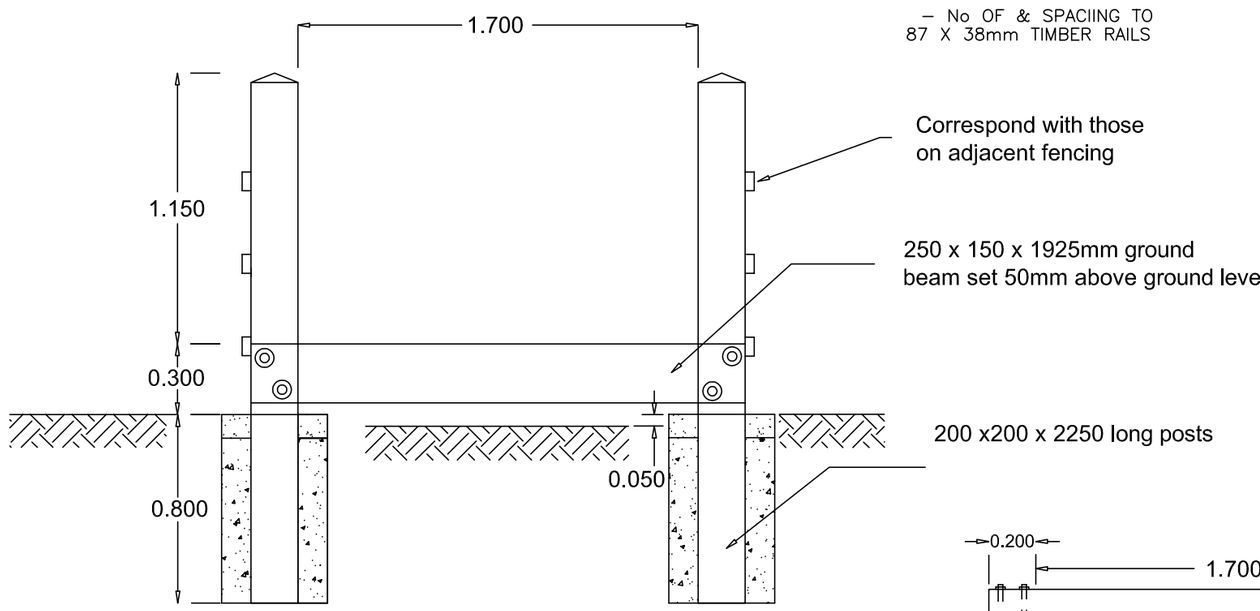

ELEVATION

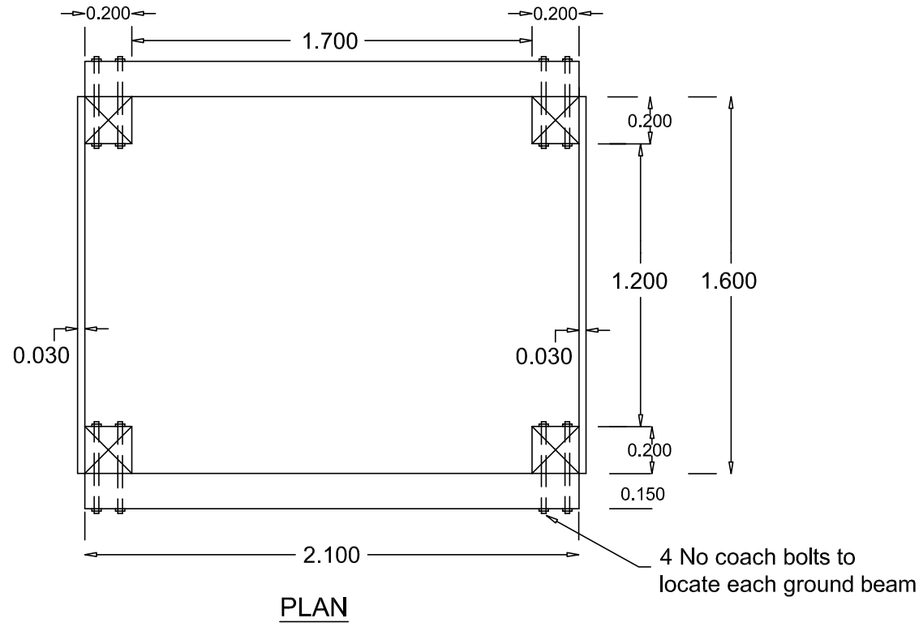

PLAN

NOTES

1. Impregnation of all timber with creosote shall be carried out in accordance with BS 913.

2. All rails to be railed along full length with a single strand of high tensile wire to adjacent posts - staples to be at no less than 500mm CTS..

3. Ground area inside stile to be surfaced with minimum 100mm depth of chipped wood or bark.

This map is based upon Ordnance Survey material with the permission of Ordnance Survey on behalf of the Controller of Her Majesty's Stationery Office © Crown Copyright. Unauthorised reproduction infringes Crown copyright and may lead to prosecution or civil proceedings. Derbyshire County Council LA076554 2006.

AMENDMENT DETAILS	BY	CHKD	APVD	DATE	NO.

ORIGINAL DRAWING SIZE 420 x 297 (A3)

DERBYSHIRE County Council

IAN STEPHENSON
Strategic Director – Environmental Services

DERBYSHIRE CONSULTING ENGINEERS

DRAWN	CHECKED	APPROVED
MJP	PS	PS
Date 19/12/07	Date 19/12/07	Date 19/12/07

PROJECT TITLE: Reclamation Standard Detail

DRAWING TITLE: Equestrian Stile

DCE Project Reference No.	9000	SCALE
Drawing Number	9000/B5	1:25

XREFS:

COMPUTER REFERENCE : K:\Environment-and-Transport\Reclamation\9316 Shallcross Incline – Whaley Bridge\Drawings\AutoCAD Drawings\Planning Drgs\9000-B5 – Equestrian Stile.dwg